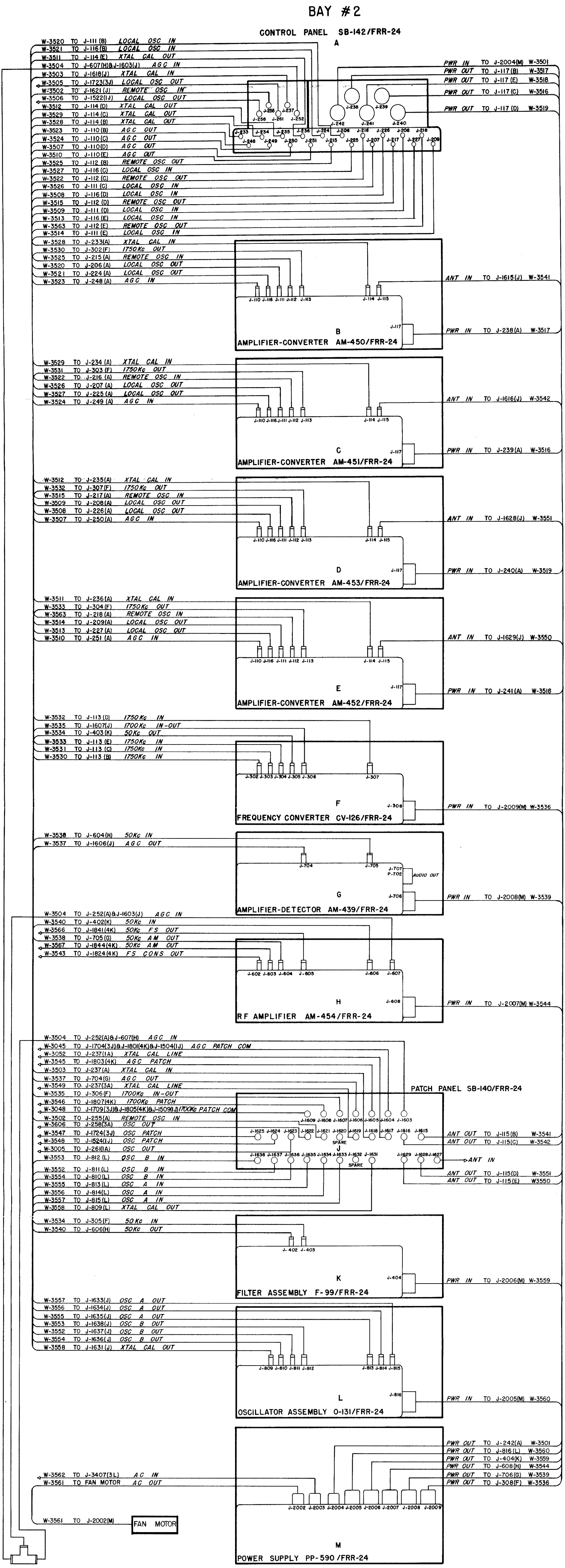

Figure 3-9. Interconnection Diagram, Bay no. 2