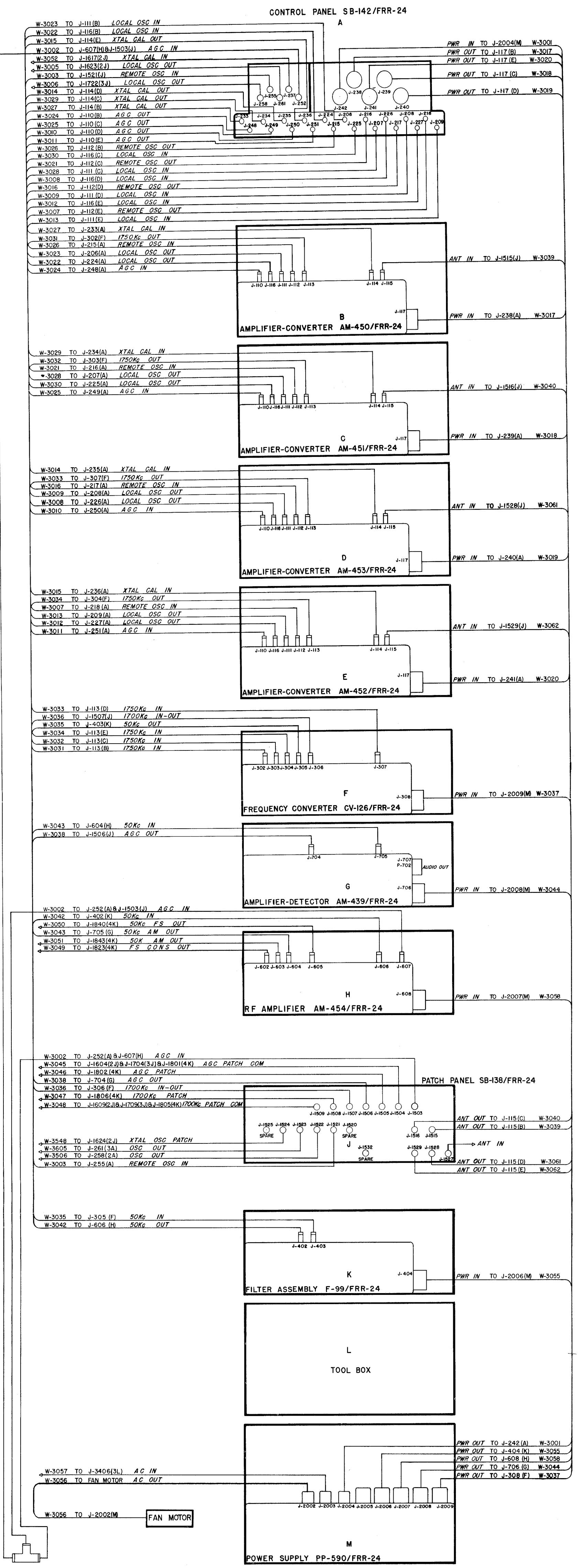

Figure 3–8. Interconnection Diagram, Bay no. 1