NO.	NOTES
1.	FOR ACTUAL WIRING DIAGRAM, SEE 7488 WD.
2.	LEGEND: ● V1 6136/6AU6WB SOCKET, TUBE ● V2 6005/6AQ5W SOCKET, TUBE C 15 PIN CONNECTOR O D TERMINAL BLOCK
3.	INDICATES CIRCUIT COMMON.
4.	ALL RESISTORS 1/2 WATT AND RESISTANCE VALUES IN OHMS, UNLESS OTHERWISE SPECIFIED.
5.	ALL CAPACITANCE VALUES IN MICROFARADS
6.	INDICATES FEMALE TERMINAL ON 15 PIN CIRCUIT CARD RECEPTACLE C___. INDICATES MALE TERMINAL ON 309865 CIRCUIT CARD ASSEMBLY.
7.	SELECTOR MAGNETS MUST BE WIRED IN SERIES (30 MA. OPERATION).
8.	FOR TELETYPE PERSONNEL REFERENCE: SPECIFICATION NO. 60,986S.
9.	REFER TO 309865 CIRCUIT CARD ASSEMBLY FOR COMPONENT POSITIONS AND DESCRIPTIONS.
10.	SIGNAL INPUT IS 0 V. SPACE, −6 V. MARK.

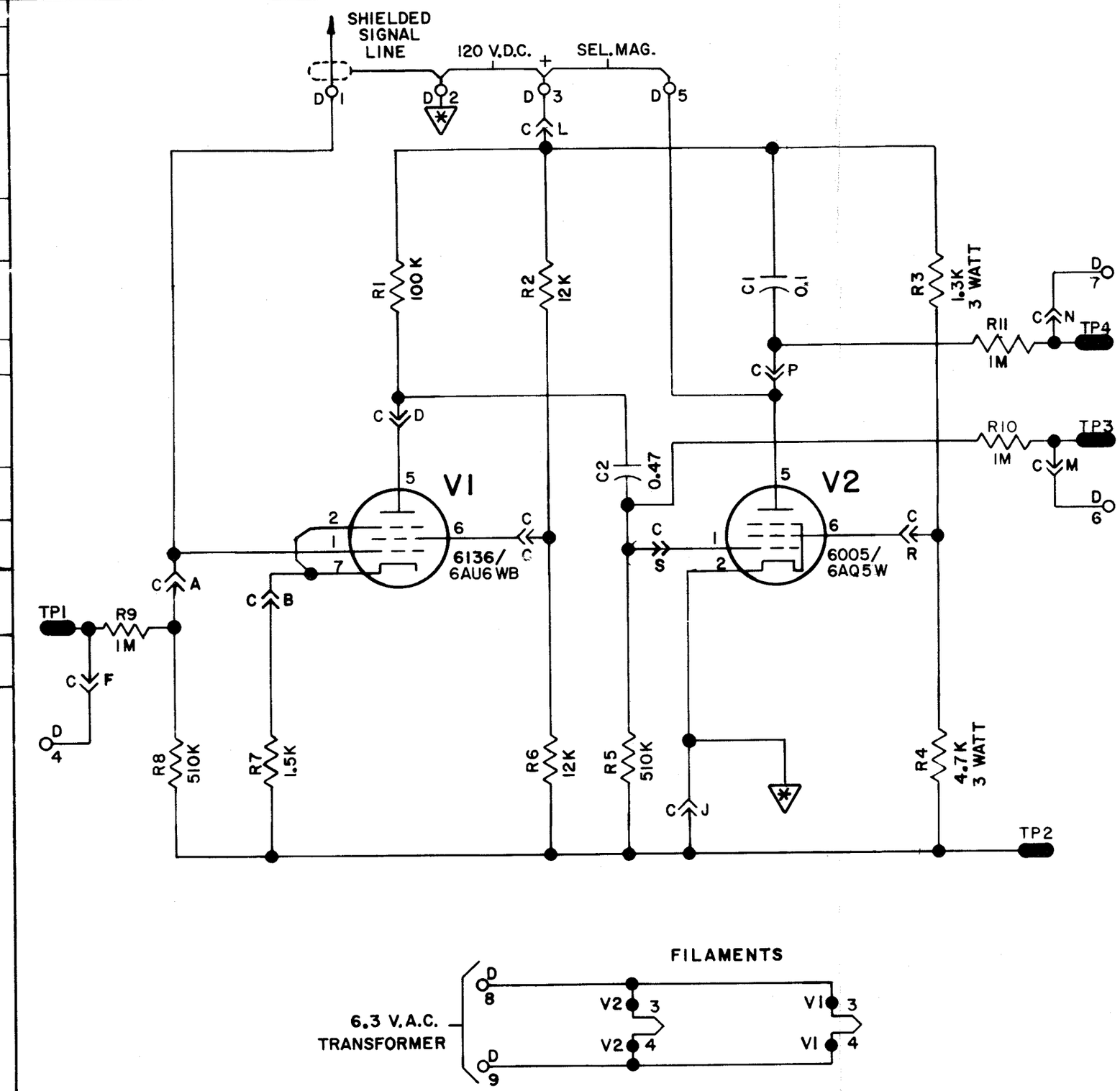

7489 WD

ISSUE	DATE	AUTH NO.
1	12-16-64	16250 R

SCHEMATIC WIRING DIAGRAM FOR VOLTAGE INPUT SMD ASSEMBLY 309863

APPROVALS

D AND R	E OF M
HJK	

E-NUMBER

PROD. NO. 7489WD

DATE 9-30-64

P.D. FILE NO. N-8-G

DRAWN J.J.A. CHKD

ENGD D.D. APPD

TELETYPE CORPORATION

7489WD

ET 131451