RTTY Journal

EXCLUSIVELY AMATEUR RADIOTELETYPE

VOLUME 31 NO. 10 | DECEMBER 1983 | ONE DOLLAR


```
                    X
                   XXX
                  XXXXX
                 XXXXXXX
                XXXXXXXXX
               XBUON ANNOX
              XJOYEUX NOELX
             XVESELE VANOCEX
            XMELE KALIKIMAKAX
           XNODLAG SONA DHUITX
          XBLWYDDYN NEWYDD DDAX
               XGODD  JULX
              XBOAS FESTASX
             XFELIZ NAVIDADX
            XMERRY CHRISTMASX
           XKALA CHRISTOUGENAX
          XVROLIJK  KERSTFEESTX
         XFROHLICHE WEIHNACHTENX
        XBUON  NATALE-GODT NYTARX
       XHUAN YING SHENG TAN CHIEHX
      XWESOLYCH SWIAT-SRETAN BOZICX
     XMOADIM LESIMHA-LINKSMU KALEDUX
    XHAUSKAA JOULUA-AID SAID MOUBARKX
          X'N  PRETTIG  KERSTMISX
         XONNELLISTA UUTTA VUOTTAX
        XZ RODHDESTVOM  KHRYSTOVYMX
       XNADOLIG LLAWEN-GOTT NYTT ARX
      XFELIC NADAL-GOJAN KRISTNASKONX
     XS  NOYYM  GODOM-FELIZ ANO NUEVOX
    XGLEDILEG JOL-NEOLINIZ KUTLU OLSUNX
   XEEN GELUKKIG NIEUWJAAR-SRETAN BOZICX
  XKRISHLINDJA  GEZUAR-KALA  CHRISTOUGENX
 XSELAMAT HARI NATAL-LAI MINGU NAJU MMETUX
      XSARBATORI FERICITE-BUON  ANNOX
     XZOROONEKO GABON-HRISTOS SE RODIX
    XBOLDOG KARACSONYT-VESELE VIANOCOEX
   XMERRY  CHRISTMAS-HAPPY  NEW  YEAR  X
   XROOMSAID JOULU PUHI-KUNG HO SHENG TANX
  XFELICES PASCUAS-EIN GLUCKLICHES NEUJAHRX
 XPRIECIGUS ZIEMAS SVETKUS-SARBATORI VESELEX
XBONNE ANNEE-BLWYDDYN NEWYDD DDA-FELIZ NATALX
XFELIZ ANO NUEVO-NOLLAIG MHAITH-UM FELIZ NATALX
XHERZLICHSTE  WEIHNACHTSGRUSSE - CHESTITA KOLEDAX
XKURISTO KOTANSAI OMEDETO-S RODHDESTVOM KHRISTOVYMX
     XHARELIJKE  KERSTGROETEN-MELE KALIKIMAKAX
    XNOSTERIA LUI CHRISTOS  SA  VA DIE DE FOLOX
   XLAIMINGU NAJU METU-LA MULTI ANI CU SANATATEX
  XWESOLYCH SWAIT BOZEGO NARODZENIA-SRETAN BOZICX
 XFROHLICHE WEIHNACHTEN-HUAN YING SHENG TAN CHIEHX
XHAPPY NEW YEAR-SARBATORI FERICITE-MERRY CHRISTMASX
XALEGRE NATAL-KULL AM WA ANTUM SALINEEN-GLADELIG JULX
XGLADELIG JUL-'N PLESIEREIGE KERSFEES-STASTNY NOVY ROKX
XYOI KURISUMASU O OINORI ITASHIMASU-NOELONIZ KUTLU OLSUNX
XJOYEUX NOEL-HAUSKAA JOULUA-HAUOLI MAKAHIKI HOOU-GODD  JULX
XGELUKKIG KESTMIS-ONNELLISTA UUTTA VUOTTAA-KALA CHRISTOUGENAX
                  XXXXXXXXXX
                 XXXXXXXXXXX
        XXXXXXXXXXXXXXXXXXXXXXXXXXXXXX
          XXXXXXXXXXXXXXXXXXXXXXXXXXX
           XXXXXXXXXXXXXXXXXXXXXXXXX
            XXXXXXXXXXXXXXXXXXXXXXX
             XXXXXXXXXXXXXXXXXXXXX
              XXXXXXXXXXXXXXXXXXX
               XXXXXXXXXXXXXXXXX
```

SEASONS GREETINGS IN 40 FORTY LANGUAGES FROM ALL OF US TO ALL OF YOU HERE IN ALL DEPTS AND ALL THE PEOPLES OF THIS GREAT WORLD EVERYWHERE

RECEIVED FROM WB6BJA AND RELAYED BY NORM, K6ZDL, TORRANCE, CALIF.

Contents

MSO'S -- Page 6

HEATH SB-303 MODIFICATION -- Page 4

POWER TRANSFORMER -- Page 11

AEA'S CP-1 and the VIC-20 -- Page 12

RTTY JOURNAL

DEE CRUMPTON, N6ELP,
formerly KA6NYW
Owner-Editor
Post Office Box RY
Cardiff-By-The-Sea, CA 92007

JOHN P. GOHEEN, KA6NYK
Associate Editor

BUSINESS OFFICE
1155 Arden Drive
Encinitas, CA 92024
Tele: 619-753-5647

Postmaster send form 3579 to:
P.O. Box 179, Cardiff, CA 92007

SUBSCRIPTION RATES

USA	$ 7.00 per year
CANADA, MEXICO	7.50 per year
CANADA AIR MAIL	8.50 per year
MEXICO AIR MAIL	8.50 per year
FOREIGN	7.50 per year
FOREIGN AIR MAIL	13.50 per year

BACK ISSUES

A duplicate of any back issue may be obtained from Red Wilson, 4011 Clearview Drive, Cedar Falls, IA 50613. $1.00 PPD & SASE. Reprints of all (2) UART articles $2.00 PPD.

MANAGERS

JEAN HURTAUD, F8XT
Chillac
16480 Brossac, France

DR. ARTHUR GEE, G2UK
21 Romany Road, Oulton Broad
Lowestoft, Suffolk
NR32 3PJ, England

KANJI YAMAMURA, JH2FHX
2-42 Umenoki, Izumi-Machi
Toki-City, Gifu-Pref
Japan Mail No. 509-51

The Publisher assumes no responsibility for errors, omissions and assumes no liability for such. Reproductions of this magazine must be accompanied by credit to the *Journal* and the Author. The *RTTY Journal* is published 10 times per year with May/June and July/August combined. Publication will be on or about the 20th of the month. Subscriptions and ads must be paid for by cash, check or money order in United States funds only.

DIALTA AMATEUR RADIO SUPPLY
212 - 48th Street, Rapid City, South Dakota 57701
Telephone (605) 343 - 6127

WE SPECIALIZE IN RTTY EQUIPMENT

HAL | INFO-TECH ELECTRONIC EQUIPMENT

Introductory Offer on New HAL DSK3100 Disk System!	Introductory Offer on New INFO-TECH M44 AMTOR Converter
The ULTIMATE Message/Traffic System, HAL MPT3100!!	The ULTIMATE in Multi-Mode Video Demods, M-600A!!
Enjoy AMTOR with the new HAL ARQ1000 Correcting Terminal	All NEW M-700A RTTY/Repeater Mailbox Controller!
Special Prices on CT2200, CWR6850, ST6000, RS2100.	Special Prices, M-70, M-200F, M-300C, M-500 Terminal

OUR PRICES CAN'T BE BEAT
- - - CALL DICK, KØVKH, FOR MONEY SAVING QUOTES! - - -

FREE BROCHURES AND INFORMATION

AMTOR RTTY

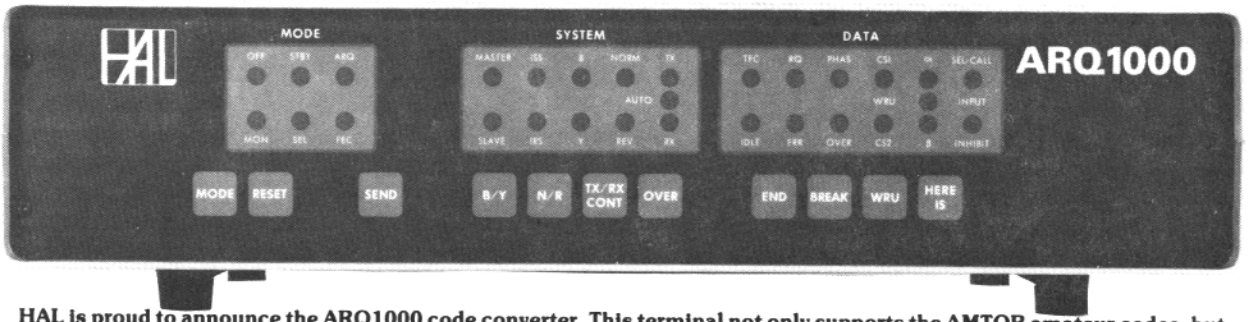

HAL is proud to announce the ARQ1000 code converter. This terminal not only supports the AMTOR amateur codes, but meets ALL of the commercial requirements of CCIR Recommendation 476-2. The ARQ1000 can be used with present and previous generation HAL RTTY products. In fact, any Baudot or ASCII full duplex terminal at data rates from 45 to 300 baud may be used with the ARQ1000. Some of the outstanding features of the ARQ1000 are:

- Send/receive error-free ARQ, FEC, and SEL-FEC modes
- Automatic listen mode for ARQ, FEC, and SEL-FEC
- Meets commercial requirements of CCIR 476-2
- By-pass mode for normal RTTY without changing cables
- Programmable ARQ access code, SEL-CAL code and WRU
- Programmable codes stored in non-volatile EEPROM
- Keyboard control of normal send/receive functions
- 30 Front panel indicators and 11 control switches
- Interfacing for loop, RS232, or TTL I/O
- "Handshaking" control for printer and keyboard or tape
- Self-contained with 120/240V, 50/60 Hz power supply
- Cabinet matches style and size of CT2200 and CT2100
- Table or rack mounting
- Built-in DM170 modem option available
- Encryption option available for commercial users
- 8½" × 17" × 10½"

The ARQ1000 is commercial-quality equipment that will give you the outstanding performance you expect from a HAL product. Write for full details and specifications of the ARQ1000.

BY POPULAR REQUEST

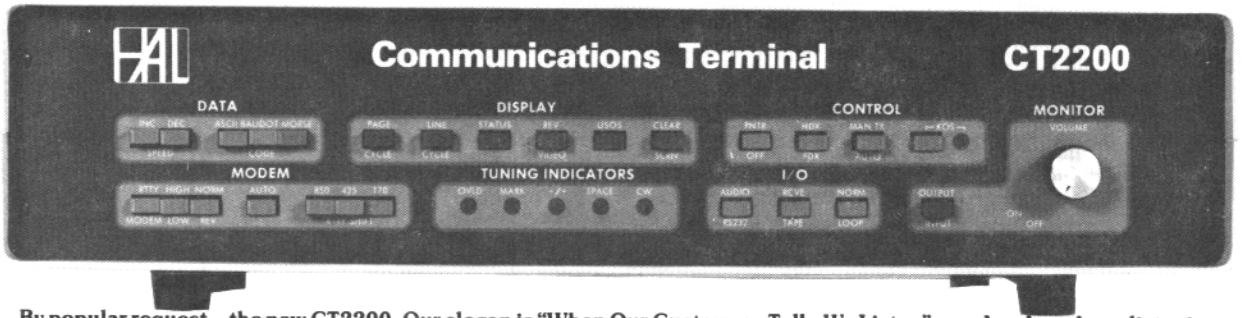

By popular request – the new CT2200. Our slogan is "When Our Customers Talk, We Listen" – and we have been listening. The CT2200 includes these often requested features:

- New AMTOR connections for use with ARQ1000
- Keyboard programming of all 8 "brag-tape" messages
- Programmable selective call code
- Expanded HERE IS storage for a total of 88 characters
- Non-volatile storage of HERE IS, "brag-tape," and SEL-CAL code
- 3⅝" × 17" × 10½"

All of the proven CT2100 features are retained. Some of these features are:
• Tuning scope outputs (a MUST for AMTOR) • Built-in demodulator for high tones, low tones, "103", or "202" modem tones • 36 or 72 character display lines • 2 pages of 72 character lines or 4 pages of 36 character lines • Split screen or full screen display • Baudot or ASCII, 45 to 1200 baud • Full or half duplex • Morse code send/receive at 5 to 99 wpm • Send/receive loop connection • Automatic transmit/receive control (KOS) • Audio, RS232C, or Loop I/O • On-screen tuning and status indicators • Clearly labeled front panel switches, not obscure keyboard key combinations • Separate convenient lap-size keyboard • Internal 120/240, 50/60 Hz power supply • Attractive shielded metal cabinet

In addition, an update kit is available so that all CT2100 owners can update their CT2100's to include CT2200 features. The kit even includes a new CT2200 front panel! Rather than making a proven product obsolete, HAL put even more behind the buttons. Pick up a CT2200 at your favorite HAL dealer and join the RTTY fun. Write for our full RTTY catalog.

HAL COMMUNICATIONS CORP.
Box 365
Urbana, IL 61801 (217) 367-7373

HEATH SB-303 RTTY MODIFICATIONS

BY: James A. Sladek, WB4UBD
1601 Melrose Parkway
Norfolk, VA 23508

The SB-303 receiver is provided with an RTTY position on the Mode Switch. This switch provides two functions in the RTTY position. The first position is to change the BFO crystal in order to place the received RTTY signal in the center of the SSB filter passband. The second is to enable the RTTY board to FSK the receiver LMO for RTTY transcieve operations.

The first modification described herein changes the Mode Switch wiring to use the CW filter when in the RTTY mode and for stations not using the built-in FSK capability, the second modification converts the RTTY board from FSK to RTTY RIT.

RTTY NARROW FILTER

Refer to Schematic "A" for the circuit changes. This Mode Switch wiring change also provides for the use of the SSB filter in AM mode if the AM filter is not installed (AM is less than optimum, but useable).

A. Rewire the Mode Switch as follows:
1. Connect MS1F-1 & 4 to CW filter input.
2. Connect MS1F-2, 3 & 5 to SSB filter input.
3. Remove ground from MS2R-11.
4. Connect MS2R-4 & 5 to MS2R-11.
5. Connect MS2R-1 to CW filter output.
6. Connect MS2R-2 & 3 to SSB filter output.

B. Change the RTTY BFO crystal to a frequency computed as follows:
Freq (KHz)= 3395.4
(Mark + Space) /2

For 170 Hz shift standard RTTY tones, the frequency is 3393.19 KHz. Since the CW filter bandpass is on the order of 500 Hz, the maximum shift useable with this modification is 425 Hz.

RTTY RIT

Refer to Schematic "B" for circuit changes. This circuit is activated in RTTY mode only and RIT is enabled via a new front panel switch.

A. Replace the RF ATTEN control with a 5K linear taper control to use as RIT control. Remove the WIDE control (R317) from the RTTY board and connect the new RIT control in its place.

B. Install an RIT enable switch (DPST) on the front panel and connect one section between the receiver MUTE line and "CW" on the RTTY board. Install an LED on the front panel and connect it between +35 volts on the RTTY board via a 3.3K resistor and the second section of the RIT enable switch connected to ground. The LED indicates activation of RTTY RIT.

C. Replace R303 & R304 with a jumper wire, change R306 to 56K and remove R305, R307 & R308. Connect "N" to "CW" and Q301-C (R308-3) to "W".

Align the RIT circuit by adjusting the NARROW control (R313) with RIT disabled to the same LMO frequency as when the RIT is enabled during RTTY receive, the MUTE ground lifts on transmit and Q301 switches to the RIT control mid-point frequency set by R313.Good Luck! WB4UBD

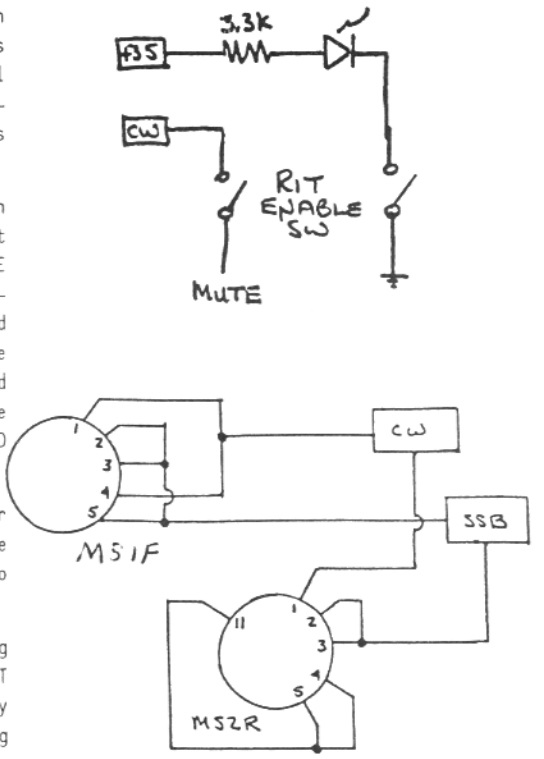

RTTY NARROW FILTER - Schematic "A"

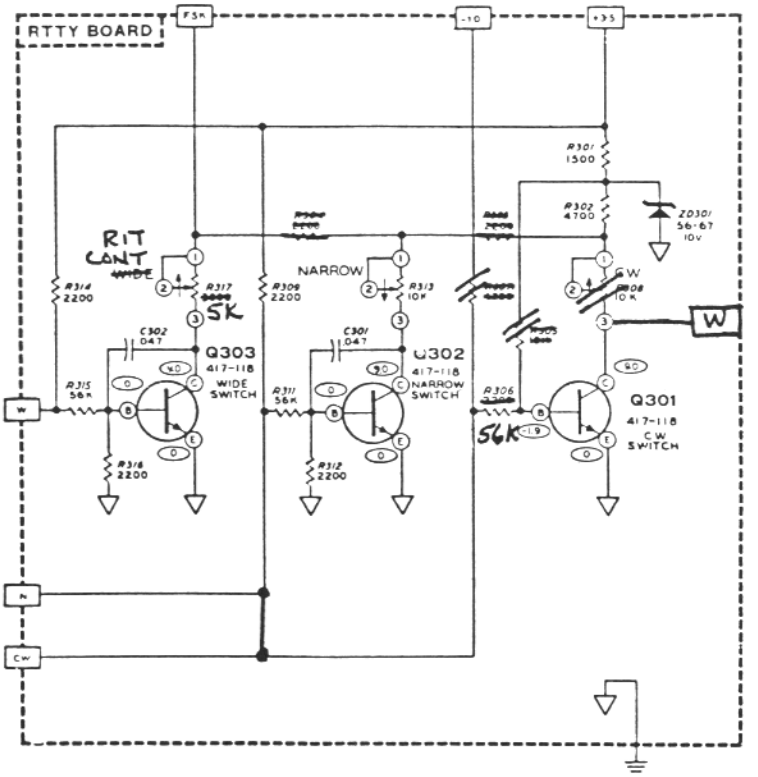

RTTY RIT - Schematic "B"

ICOM IC-751

The New Standard of Comparison

NEW Competition Grade Transceiver!

ICOM is proud to announce the most advanced amateur transceiver in communications history. Based on ICOM's proven high technology and wide dynamic range HF receiver designs, the IC-751 is a competition grade ham receiver, a 100KHz to 30 MHz continuous tuning general coverage receiver, and a full featured all mode solid state ham band transmitter, that covers all the new WARC bands. And with the optional internal AC power supply, it becomes one compact, portable/field day package.

Receiver. Utilizing an ICOM developed J-FET DBM, the IC-751 has a 105dB dynamic range. The 70.4515MHz first IF virtually eliminates spurious responses, and a high gain 9.0115MHz second IF, with ICOM's PBT selectivity. A deep IF notch filter, adjustable AGC and noise blanker (can be adjusted to eliminate the woodpecker), audio tone control, plus RIT with separate readout provides easy-to-adjust, clear reception even in the presence of strong QRM or high noise levels. A low noise receiver preamp provides exceptional reception sensitivity as required.

Transmitter. The transmitter features high reliability 2SC2097 transistors in a low IMD (-32dB @ 100W), full 100% duty cycle (internal cooling fan standard), 12 volt DC design. Quiet relay selection of transmitter LPF's, transmit audio tone control, monitor circuit (to monitor your own CW or SSB signal), XIT, and a high performance speech processor enhance the IC-751 transmitter's operation. For the CW operator, semi break-in or full QSK is provided for smooth, fast break-in keying.

Dual VFO. Dual VFO's controlled by a large tuning knob provide easy access to split frequencies used in DX operation. Normal tuning rate is in 10Hz increments and increasing the speed of rotation of the main tuning knob shifts the tuning to 100Hz increments automatically. Pushing the tuning speed button gives 1KHz tuning. Digital outputs are available for computer control of the transceiver frequency and functions, and for a synthesized voice frequency readout.

32 Memories. Thirty two tunable memories are provided to store mode, VFO, and frequency, and the CPU is backed by an internal lithium memory backup battery to maintain the memories for up to seven years. Scanning of frequencies, memories and bands are possible from the unit, or from the HM 12 scanning microphone. In the Mode-S mode, only those memories with a particular mode are scanned; others are bypassed. Data may be transferred between VFO's, from VFO to memories, or from memories to VFO.

Standard Features. All of the above features plus FM unit, high shape factor FL44A, 455 Khz SSB filter, full function metering, SSB and FM squelch, convenient large controls, FM option, a large selection of plug-in filters, and a new high visibility multi-color flourescent display that shows frequency in white, and other functions in white or red, make the IC-751 your best choice for a superior grade HF base transceiver.

Options. External frequency controller, external PS-15 power supply, internal power supply, high stability reference crystal (less than 100Hz, -10°C to +60°C), HM12 hand mic, desk mic, filter options: SSB: FL30
CWN: FL52A, FL53A
AM: FL33

ICOM
The World System

ICOM America, Inc., 2112-116th Ave NE, Bellevue, WA 98004 **(206)454-8155** / 3331 Towerwood Drive, Suite 307, Dallas, TX 75234 **(214)620-2780**

All stated specifications are approximate and subject to change without notice or obligation. All ICOM radios significantly exceed FCC regulations limiting spurious emissions.

MSO'S

by *Dick Uhrmacher,* K0VKH

INSTALLMENT #1

It is with a lot of interest and trepidation that I start this series of articles called "The RTTY Mailbox" and I sincerely hope that this column will provide some insight and information on the increasingly popular Message Storage Operations, (MSO's), more popularly known as "mailboxes".

I hasten to point out, that it is the end-user of these sophisticated systems that this column is directed towards, and consequently, it is your questions, ideas and comments, that will provide this author with the 'ammunition' and motivation to provide timely and beneficial comments in this column. In this light, I encourage you to write to me, or to the RTTY JOURNAL, with your comments or questions, and I shall try to provide you with timely information.

As a matter of personal background information, I have maintained a MSO on 20 meters for the past seven years, some of which was in the traditional WRU and SEL-CAL mode, and more recently utilizing the more sophisticated HAL disk MSO system. As the old saying goes, "there is no substitute for experience", and I encourage all those interested in utilizing my MSO, (as well as the other MSO's), to really gain experience in these fantastic systems. More about how to find these systems and utilize them in later editions of this column.

By definition, a MSO is just that. A message storage operation. Whether it is a WRU and SEL-CAL operation, a Heathkit computer that recognizes access codes and commands, a Radio Shack TRS-80 in MSO service, or a HAL Disk MSO System, they all boil down to about the same thing. A system designed to allow remote monitoring of RTTY communications, which permits the remote user to command specific functions to be acted upon by the MSO, and which can be utilized for the ultimate function, to communicate with friends, acquaintances and other Amateur Radio Operators. The differences between systems is usually defined by degree of technical complexity. Some like WRU/SEL-CAL being less technical in nature, and others like the HAL Disk System exhibiting a high degree of technical sophistication. In the end, MSO's all provide the capability to receive and store information to be utilized on a delayed basis. The more sophisticated systems additionally provide the ability to call from memory, messages left at some previous time, and this demonstrates a quantum leap in technology. It is this feature of the MSO that most readily describes the state-of-the-art, and which provides a service to all users that was not available just a short time ago.

The general concept of message storing is most certainly not new. It has been utilized in both commercial and Amateur radio fields for many years, and only recently has a sizeable interest been seen in this area. This increased interest can be directly attributed to technological advances in computer sciences, technical expertise and individual pioneering efforts in installing and maintaining these systems. The availability of personal and minicomputers has also impacted sophisticated RTTY systems as well. What we now see as the 'ultimate machine', actually will be considered as passe in the near future.

We've used several 'buzzwords' in the first part of this column, so now it's time to define them a bit. First, WRU and SEL-CAL. These two systems are usually used in conjunction with each other. WRU simply means "Who Are You"? In typical WRU mode, a RTTY station is designed so that it will receive and decode a set of alpha/numeric characters on a specific frequency. When these characters correspond to a pre-determined code, (the actual WRU Code), the receiving stations transmitter is activated, and it replies with some form of identifying information, then turns itself off. The basic purpose of a WRU system is to allow a REMOTE station to determine whether or not a distant RTTY station is monitoring some particular frequency. When the distant stations transmitter is heard replying to the WRU code, it is assured that the stations receiving equipment is monitoring that frequency as well.

Now that we are assured that the distant RTTY stations receiving equipment is monitoring, it is time to activate a SEL-CAL system. SEL-CAL is an abbreviation for Selective Calling. It is merely a system designed to receive and decode a set of alpha/numeric characters, and to activate some further device to RECORD whatever data follows the SEL-CAL code. Typically, the receipt of the SEL-CAL code turns on a printer, cassette recorder, or some like device, or may, in more sophisticated systems, cause received text to be stored in RAM (Random Access Memory), or other memory devices. After the SEL-CAL system has done its job of recording received text it is returned to its monitoring state, usually by receipt of some 'off code'. four N's (NNNN), being typical of one such code. The system is now back to its original monitoring state, patiently waiting for another WRU interogation. This is most likely the simplest form of message storing, yet it does require considerable expertise to be reliable on a routine basis. What separates it from the next step in RTTY message storage evolution, is its lack of ability to provide stored information in the reverse direction,

TO PAGE 15

ANNOUNCING MMD RTTY PACKAGE

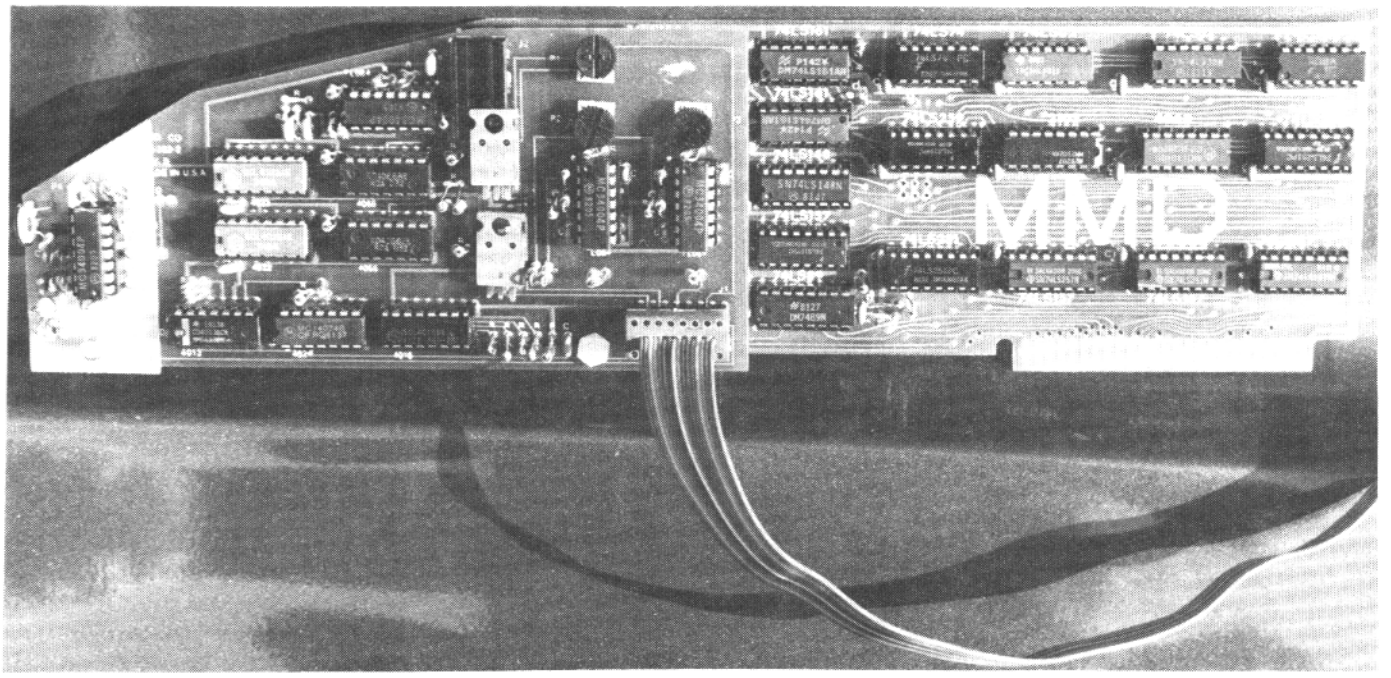

NEWEST RTTY PACKAGE FOR THE
APPLE* COMPUTER

	MACROTRONICS	IRL	RADCOM	MMD.
INTERNAL UNIT ONLY	NO	NO	YES	YES
USE OF REAL TIME CLOCK	NO	NO	NO	YES
CRYSTAL CONTROLLED AFSK	YES	NO	NO	YES
ANY SHIFT FROM 21 TO 900HZ	NO	NO	NO	YES
80 COLUMN VIDEO**	NO	NO	NO	YES
USE OF EXTRA MEMORY)64K***	NO	NO	NO	YES
DISK SAVE WITH NO LOSS OF DATA	NO	NO	NO	YES
ON-LINE EDITOR (KEYBOARD)	YES	NO	NO	YES
SEL-CAL-MAILBOX	WRU ONLY	NO	NO	YES
SELECTABLE TEXT WINDOWING RX/TX	NO	NO	NO	YES
VARIABLE BANDPASS FILTER	NO	NO	NO	YES
VARIABLE MARK TONE-21 TO 4500HZ	NO	NO	NO	YES
DIGITAL RECEIVE FILTERS	NO	NO	NO	YES

* APPLE IS TM OF APPLE COMPUTER
** 80 COLUMN VIDEO IS PROVIDED BY THE USE OF THE VIDEX OR THE M & R ELECTRONICS 80 COLUMN BOARDS
*** THE MMD RTTY PACKAGE SUPPORTS ONLY THE LEGEND 64K AND 128K MEMORY EXPANSION CARDS

COMMING SOON REAL TIME CLOCK

MMD.
4163 FULLER AVE.
EUGENE, OREGON 97402

EUROPEAN INQUIRIES
PLEASE CONTACT:

Brosius Köhler
Lister Kirchweg III
3000 Hannover 1
West Germany
Telefon: 0202-554055-56

PHONE# (503) 689-6205

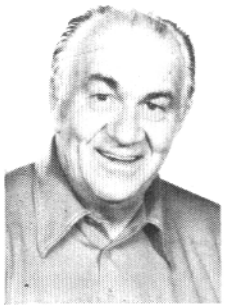

DX and AMTOR

by BILL

WØLHS SNYDER, 1514 S. 12th Street, Fargo, ND 58103

"UNITED ARAB EMIRATES COMING IN S-9!"

"..BUT EVERYONE SAYS HE'S A SLIM!"

The first RTTY contest of autumn was the C.A.R.T.G. As usual, it was a fun event. I returned from a trip to the west coast just in time to join the festivities. I have an idea my wife thinks I hurried home from visiting her relatives just to contest! But it's not true, I had actually forgotten the contest dates (I swear it's true!)

CYØSPI, Andy of St. Paul fame, mailed in a copy of his DXpedition log. On 80 meters he managed to contact K1LPS, VE1CBK, VE1RB and K1MM; On 10 Andy snagged only one station: EA5CVR; and on 40 only N8CC and W8CLN. 269 contacts were on 20 and the balance of 115 happened on 15. All in all, 390 contacts were listed.

K6WZ, Carl, sent a print-out of a post-DXpedition QSO with Andy. In it Andy thanks Gin, JA1ACB, for the TONO he used on the island, and tells Carl that he hopes to tackle Sable Island next September Sable is another DXCC island near Nova Scotia. It is accessible only by air. He hopes to get permission for that trip, which is none-too-easy as he spent 300 bucks on phone calls alone getting permission to go to SPI; which, he says, is easier to obtain than for Sable.

W6WZ also informs us that DJ6QT will be on from 3V8 land however, other details were missing.

HZ1AB, Dave, was very active during the CARTG contest. Larry, K1LPS, reports working Dave via long path when the over-the-pole heading failed. Larry found C21BD, Det, with a nice solid signal and begging for QSO's. "A far cry from those gigantic pile-ups in August," commented Larry. He also worked another new one, EL2AT, who now is blasting into the states regulary.

The nicest thing to report this month is the Japanese DXers sending a memorial for Mac, K7BV. Mac's widow has been turning all memorials over to the Diabetes Foundation, as Mac suffered from that disease for a long time.

HBØHK, Willy, had a good time working 300 stations from Liechtenstein. Although condx were not too good, he said he gave a large bunch of RTTY DXers a new country.

W4UG, Gay, a RTTY bug for four years, and also the Roanoke Division Director of the ARRL, agrees with me about excessive RY's when calling another station. Just send his call sign once or twice and your own three to five times, depending on band conditions. I only run RY's when I am calling a station on schedule and with only one line and his call about ten times. In normal DX contacts I suggest sending the other station's callsign twice and yours only once. My reasoning for the double call is this: many times it takes a few characters to downshift the receiving unit from figures. At any rate, it seems to work well for me.

Gay reported on the Houston meeting of the ARRL board of directors. Keep in mind that Gay; Carl Smith,WØBWJ, and Gar Anderson, KØGA, are the only RTTY operators on the board. The rest of them need some education on our little chunk of the spectrum.

Gay says there is an attempt to authorize RTTY on 160. The endorsable DXCC was left on the ARRL "table" from the last board meeting. If the League is going to endorse RTTY DXCC awards they should start as soon as possible since there have only been about 70 certificates issued and when they do issue updates, they will have to start from scratch with those obtaining their initial certificate.

I hope that you have all written your letters with your thoughts on MSOs and the RTTY spectrum being moved, expanded etc., if you have not please take a few minutes to do so. It is seldom the ARRL wants or even asks for our input directly as they are doing now. Send a card or letter to your section manager or director or to the Chairman of the ARRL Plans and Programs Committee Lys Carey, KØPGM. Lys is the director that talked to Editor Dee, N6ELP about this subject while attending the Houston Convention. At that time he did not want to be bothered with all of the correspondence himself and wanted it dispursed to the sections managers. Well, who ever you send it to will, I am sure, get it moving along, hopefully with some addendum of their own. Let's face our problems now---rather than wait and see them get larger. Since I brought up the MSO issue, the best run MSO units have published "Golden Rules for MSO operations." They make sense, too!

JA1DSI, Minoru, surprised me with a print-out of my very first AMTOR QSO (which was with him). The copy was perfect, including all my typos! Minoru says AMTOR is legal in Japan, and that only the following stations are on the mode: JA1ACB, JF3JIQ, JA1ZF, JR2TZL, JA3XPJ (inactive at the moment) and himself. Minoru gets good copy of W1AW's bulletins in the FEC mode on AMTOR, and he hopes they will send all League bulletins in that mode.

ON4BX, Arthur, (231/223) reported working 3X4EX in Konakri (QSL via N4CID). The QSO took place around 1430 on 10 meters. I5FLM, Luciano, plus a few others also worked the rare one.

Arthur makes the DX fraternity

drool when he mentions that he and a small number of EU stations worked I2RTY during the Japanese DXpedition's short stay on the island.

Arthur's other conquests include 9M8PW. There is a great deal of cooperation among DXers in Europe and Arthur mentions that F8XT, Jean, and I5FLN kept the wires hot sharing DX info with each other.

If you missed the I2 station on that go-round, keep the faith. N4FJL, Tom, is planning a trip to that little island in February and March. Tom's gear is on the way there now, so things are underway. Next month we should have more information on Tom's Dxpedition.

W4CQI, Cliff, (178/169), was one of the lucky US ops to catch 3X4EX. Cliff has been adding to his string with these goodies: UR2FU, VP2EUQ, CT2AK, 7Z2AP, 5R8AL, CYØSPI, J6LOV, UO5OWS, IR8YL, J28DQ and IR8JD, the OM of IR8YL, Jocelyn. Cliff says his cards from IR8YL and J28DQ arrived in only two weeks. Cliff is gearing up for AMTOR with a Mark II board plus computer.

WB4UBD, Jim, lists a bunch of new ones: A4XGY, ON3FG, C21BD, and 9K2KA. Jim also tells of having to get up in the middle of the night to take a trip to Washington. Just before leaving he called CQ to an apparently dead band and back came VK2NS to make his 100th country on RTTY. The late K7BV, Mac, used to say:"Never assume the band is dead--test it out!" Good advice!

W6MI, AL, informs us that ZD7BW is not too pleased with RTTY. It took him $2\frac{1}{2}$ hours to work 15 stations. Al further indicated that the ZD7 will be on 15 if he comes back on the FSK mode.

I4XJE, Gabriele, is writing a column on DX activities for the I.A.-R.T.G. Magazine. Keep Gabriele in mind if you run into stories in your European area. He is running both RTTY and AMTOR, so he is quite accessible. I had a very nice contact with him on AMTOR. Gabriele has worked 20 countries on the chirpy mode. He indicates he is waiting for a clarification of the Italian law governing Amtor activities.

AMTOR EAVESDROPPINGS: "As you say, signal reports on AMTOR are meaningless, it either works or it doesn't"....."KA3AAK de KA3AAK"..."The last curtesy of the QSO is the QSL!"..... 'very best wishes and best 73's of all kinds."...."My problems are only mental"...."your signal is down at the very left end of the meter"..... "I have nine kids, but only one wife" ..."I also use the computer for work processing."...."AMTOR will become the best mode for the newcomer with poor antennas and low budget."....."I see by your brag tape you like the high-priced spread."

RTTY EAVESDROPPINGS: "My fingers are not walking too well today."..."Like the jingle says:'It's filler time!".. .. "Stand by for my crud tape."..... "I am 83 and hop to reach 100"..... Jerry is in Florida and he might have turned off the computer!"... "This recycled vegatation sheet is sent by. .."...."..."Retired here and just trying to stay on top of the daisies" ..."Running into a TI99/4Q confuser." ..."DX on RTTY is more fun than SSB, and you don't have to shout!"....."I don't get on the RTTY DX portion very often, because I have trouble finding it."...."I have sleepy fingers."..... "QSL here 10/1000 %."..."The DX score here is now 152/143/3. That's worked, confirmed and pirates."...."Send me 40 disks for picture files."....."My oldest son is 91 and in college."... "Antenna here is a hi-strain."..... "Worked on the ABC Wide World of Shorts."..."I'm a very old man, age 08."...."The quick brown fox dumps... etc."..."I couldn't sleep but the 20 meter band could!".... "That's calling the kettle LID!"....."There were two gays calling me."...."We have 250 machines on auto-start in this area. We call it RTTY-city."....."Without a buffer, turkeys like me would be in big trouble!"...."Got to QRT and go to the unemployment office."..... "Hope to meet you again son soon."... "73 from the nation's Xmas tree city."..."Bon soir and Bon weekend."

W5SMM, Vic, is going on a sailing trip in his 50 foot sloop and will be operating AMTOR from the boat. He plans to leave about the end of M March. His route will take him from Corpus Cristi via many islands to the Mediterranean. Should be a fun trip.

ON4UN, John, and I had a nice AMTOR QSO wherein John turned the power down to 5 watts. John mentioned his contact with JA1ZF, Deo, who passed along the information that AP2KS, Khalid, should be on RTTY soon. John also recently worked 9M8PW and C21KH.

K4AGC, Leo, got his QSL card from KG4AH by calling him on the phone a couple times. They only live 20 miles apart, that might have something to do with it. Leo reported his score in this years CARTG contest as only being 10 points higher than last year, when he was sixth in the world. This year Leo bemoans the fact that he did not work one single JA station!

5BOCV, Nicos, is on with 80 watts from Cyprus. The call is a special prefix for the World Communications Year. He can be QSL'd via Box 219, Limassol, Cyprus. Include a green stamp or 3 IRC's.

UT5RP, Dima, was heard on 15 at 1500Z calling CQ using 50 baud speed. Dima got a number of answers which would indicate more and more are using computers instead of hardware.

LU4EGE, Juan, says that he and Dee, N6ELP have set up a DX net on 15 meters on Sundays at 2200Z around 21090. So far they have had a fair amount of success. They started during the WAEDC contest and Juan was ,of course, swamped with calls. JA1EO will handle Asian calls, Dee US calls and Juan SA calls. The Europeans have not checked in so far.

OA6BJ, Bill, is a newcomer to RTTY although he tells us he has been a Ham for 40 years. He can be QSL'd via W.B. Ford, Casilla 35, ILO, Peru, SA. Bill says be sure to include his name as there are a number of people using the address.

CE3CEW, Carmen, has been suddenly bitten by the DXCC and WAS bug. Carmen is on almost daily on 15 and 20 meters from Santiago. Carmen needs QSL cards with rare DX stations. She

and her husband have been on Dxpeditions to Easter Island and Juan Fernandez. There is a possibility of another Easter Island trip by the Chilean Club in late November or December. The call will probably be XQOAA. Carmen hopes to be the first YL to win DXCC and/or WAS award on RTTY. Dee, N6ELP is also hoping to be first.

F8XT, Jean, is nearing the magic 200 country number. Recently Jean worked J28DQ in Djibouti, 3X4EX in Guinea and T2RTY in Tuvalu.

W2PSU, Ken, (159/151) lists some new ones: JY9RV, Via GW3RVG; GU4/DL3-EW, via home addressl J28DQ, Box 1076 Djibouti, Africa. Ken comments on the way that portables are listed in the British Isles now. I am doing it in my computer that way so when I make a sort, it puts them in the proper place callsign/wise. Ken finds no fault with billboard callsigns featuring name and QTH. He adds that he always calls DX with only "de W2PSU" three or four times. I agree with you Ken, eliminate both the RY's and sending the called stations' sign more than once on the initial call-up. I do think that subsequent call-ups should be this way:"F8XT F8XT de WØLHS...R etc." My reasoning is this: Many times the first callsign gets garbled due to letter/figures errors, so by duplicating, it gives others a good chance to get the callsign correctly. How many times have you watched a QSO and thought you were latched on to something good, only to discover that it was a W2 rather than the rare T2?

AMTOR EXPERIENCE OF THE MONTH: I called G3PLX on auto-start, left him a message, only to discover that I had hooked up with a W7, with whom I then had a very nice rag chew. If you understand how AMTOR works, this is impossible, except for the W7 putting the wrong SEL-CAL code in his machine. I left the message for Peter later, as we really didn't have any propagation that day.

ED3WCY is the World Communications Year call of the Barcelona Radio Club. They have a special QSL and can be confirmed through Box 9575, Barcelona or via EA3CUB using the Bureau route.

One of our long time RTTY rare-country DXers made this comment to me during a QSO (I pass it on for the edification of the newcomers.): "I get a little angry with breakers in a QSO. Seems SSB is invading RTTY!"

OZ1CRL, Jorgen, (135/116) reports receiving his ARRL DXCC # 60 and WAS #78. If he will send the JOURNAL a copy of the submitted list with the ARRL confirmation he can also get our awards.

I8AA, Ros, (210/204), after working A6XJC, who said his name was AL, suspected a Slim in our midst. So Ros called the president of the Caserta Radio Club and confirmed his suspicions. According to Ros, A6XTH (Theo) is the only good call in the U.A.E. on RTTY. I5WT has a card from him, and Ros is waiting. The genuine A6XJC has a manager in the States and another in Europe. Ros forwards this address:A6XTH, Box 5708, Dubai,U.A.E.

W6JOX, Chuck, (157/151), joins the unhappy crowd who have not received from HC8KA and KA2MT/JDI. You're not alone Chuck!

N1BNK, Bert, who operates from New Hampshire, likes to use billboards on his transmissions. I agree with Bill, they should be put on some transmissions, but not all. Like Bert I have had DX stations return to the "STATION IN NORTH DAKOTA' if I billboard the initial call-up. A few ops have written to me complaining about the billboard on every transmission. As usual, it is too much of a good thing that is bad. Bert also tells us that the common calling AMTOR frequency in the U.K. is 14077, but on the continent they use 14075.

K1LPS, Larry in Vermont, sees many poor operating practices on RTTY. One item is the improper use of the pro-signs SK etc. Larry does not answer calls when he is finished with a QSO if the frequency is not his (no one should). I run into the same thing when newcomers needing North Dakota call me after a QSO. (How do you tell who has the frequency when you find two stations in QSO????????) What we need is a special set of prosigns for RTTY, and another for AMTOR, which will definitely indicate who "owns" the frequency and also tells everyone when they should call! Any suggestions? Send your ideas to me.

W3KV, John (215/213) send in this list: TR8YL and TR8JD, via F6AJA; C3ØLB, Via EA7CJP; 9K2DZ; 9M2OK; 9H4P TI2ALG via box 2842, San Jose; FG7CR; YO4UQ; SP9BCH; SP2DVH; 5N23ECA; DU1-RBN and SV1DO. John should be chirping soon.

Dee, N6ELP reports that John, ON4UN is back on RTTY after an absence of almost 20 years. John was one of the first on RTTY in 1962. He has DXCC 317/336/5B DXCC/5BWAS/5BWAZ nri/ worked all counties. Wow! QSL John Box 41, 9000 Ghent, Belgium.

I would like to thank all the above plus NN6F, WA2IUJ, I2OLW, OZ1CRL, W7LNT and CT8JAM.

73 de Bill, Dit Dit and Chirp Chirp..

by GEORGE

HITS & MISSES

GEORGE HAMMON, WA6CQW
14215 Pecan Park Lane Space 73
El Cajon, CA 92021

The 1984 SAROC Convention will be held January 12, 13, 14 and 15,1984. Advance registrationis $17.00. The 1984 Convention will be held at the Hacienda Hotel in Las Vegas, Nevada. Two Hacienda breakfasts or brunches in the Sunburst room will be included with each advance registration, one on Saturday and one on Sunday. Exhibits and swap tables will be open on Saturday. One swap table will be free to all non-commercial advanced registrants. Advance registration closes January 1, 1984. Main award drawing will be held on Saturday afternoon and you must be present to win. Technical sessions swap tables and a cocktail party hosted by Ham Radio Magazine Friday evening along with the latest goodies on display will once again make this Las Vegas SAROC Convention for 1984 lots of fun. The Hacienda Hotel will offer a room rate of $35.00 plus fifty cents room tax. I will leave on Friday morning with my wife Jeanne, and hope to say hello to the RTTY gang.

NO CODE

The decision on no code licensing will be unlikely until 1984. I feel that it will go into effect despite the ARRL and all of our letter writing. I rank this lunacy along with the call sign changes and the 10 meter amplifier ban.

CALL SIGNS

The prefix hunters will enjoy this. California Amateurs will be allowed, during the months of July 1, 1984 to August 31, 1984 the use of either "23" or "84" in place of their "6", to commemorate the 23rd Olympiad in the year 1984. Thus my call could be: WA23CQW or WA84CQW. This designation will be allowed only for the period of time above and only for Californians living in the state at that time.

YEARS END

The year is about over and some will say good riddance to 1983. This old year sure had its bumpy road. RTTY has never been more in the limelight.

All major Amateur Radio Magazines have devoted pages to RTTY and the groundswell to Amtor, packet radio and computers, I think in part, have brought about the more visable posture for RTTY.

The year ends with a lot of good memories. The Holidays approach... Thanksgiving, then Christmas with New Years Day not far behind. I wish to personally express Holiday wishes to all.

The year 1983 ends and the year 1984 begins. Please drop that article off to the JOURNAL, write that letter or note with your thoughts. Best Holiday wishes from my family to yours.

So long for now, George, WA6CQW....

OOOOOOOOOOOOOOOOOOOOOOOOOOOOOOOOOOOOOO

ADDITION TO OCTOBER 1983 issue page 11. Picture caption for lowest left hand picture should be :Hank W6SKC, Tom, W8OMV and Ralph, W8BTW. Sorry Ralph. The OM next to Art XE1LL still has not been identified. (He will be in Dayton I am sure.)

OOOOOOOOOOOOOOOOOOOOOOOOOOOOOOOOOOOOOO

LOOKING FOR A POWER TRANSFORMER?

Don't fail to examine the possibilities of the transformers that can be found in old junked Model 15/19 teletype machines. Look in their loop supplies for these goodies. The ones I found were made by Northern Electric and CTS.

They have two secondary windings that seem to be good for at least two amps. Each transformer that was tested had a different set of voltage taps in the ranges indicated by the drawing below. One even had a third secondary winding of 22 volts. The many taps allow for quite a variety of voltages.

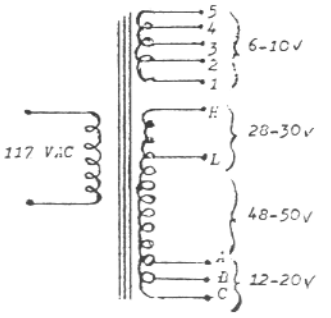

OOOOOOOOOOOOOOOOOOOOOOOOOOOOOOOOOOOOOO

RESULTS OF THE 1983 VK/ZL CONTEST

SINGLE OPERATOR

1. I5FZI	2,410,500	37.VK2SG	57,900
2. VK2RT	2,405,976	38.DF6WCY	36,500
3. I8JVK	2,012,586	39.KB2VO	34,248
4. JA6GIJ	1,612,256	40.VK2BIS	31,592
5. VK2TTY	1,508,220	41.K6WZ	27,837
6. OZ1CRL	1,290,040	42.DF5BX	26,888
7. I4JXE	1,119,668	43.DK4EC	25,850
8. JR2CFD	983,132	44.DJ8WCY	25,836
9. K4AGC	978,644	45.DL9MBZ	24,036
10.JH2PDS	938,894	46.SP2UU	20,340
11.DL1VR	807,896	47.OZ1GRF	20,092
12.I8JRA	620,582	48.OK1SPS	17,199
13.VK8HA	613,314	49.JA2VHG	15,798
14.YB2BLI	551,448	50.DK9CK	12.240
15.VK2BQS	483,888	51.TI2DO	12.032
16.W5HEZ	475,690	52.F3IJ	8,875
17.OK3KJF	400,688	53.JF3PLF	8,444
18.G3HJC	368,580	54.OE5PTM	8,120
19.JR6AG	300,315	55.JI3AXU	6,368
20.JA2VFW	285,376	56.JA7ML	4,936
21.JA5TX	258,625	57.PY3IT	3,960
22.VE2QO	237,650	58.PA3BVT	3,664
23.JA1IQV	183,164	59.DK8DB	3,332
24.SM5FUG	181,856	60.SM6JQK	3,120
25.SM7AIA	156,730	61.DK5KJ	2,884
26.JA1BYL	152,765	62.YO3RF	2,838
27.SM7SLU	138,890	63.VK2APQ	2,160
28.W2KHQ	136,410	64.JJ1EEA	1,584
29.OE2SNL	131,448	65.HK5BZ	1,519
30.DJ4OP	107,120	66.SM6OEQ	1,188
31.VE7VP	90,936	67.JN1BAX	964
32.VK3BUS	87,480	68.JH3DPB	918
33.WB4UBD	79,060	69.DF7FB	648
34.JF2PZH	65,600	70.VK2BLU	504
35.IK5CKL	62,115	71.SP2FF/1	496
36.VK2EG	62,064	72.VK2AJT	435

MULTI-OPS

1.VE3UR 316,030, 2. JA2YKA 90,615
3.OK3KII 41,310 4. VK2BQK 10,

AEA and the VIC-20 on RTTY

BY Emily Wolfe,
P.O.B. 592
Solana Beach, CA 90275

I am a YL who has always been interested in Teletype. When I became licensed almost six years ago, the cost of getting into teletype was quite substantial, therefore I got involved with other facets of the hobby.

Last November I purchased a Vic-20 computer and was informed, by many of my Amateur friends, that the hardware and software for getting involved with teletype was now on the market at a fairly decent price for the Vic-20.

When a friend went on vacation, he loaned me his Kantronics interface and the Hamsoft program. I now had the capabilities for transmitting and receiving teletype on the HF bands. Well, needless to say, since my HF rig is an old tube type and does not have all the sophisticated filtering of the new solid state rigs, I spent most of my time trying to tune in any signal around so I could get some copy on my TV monitor. This became old very quick and quite frankly I became very disenchanted with Kantronics and teletype.

Then quite by accident, Dee, N6ELP, asked me if I would like to try the new CP-1 from Advanced Electronics Associates with my VIC-20. I agreed and I am very impressed. I am using it at the moment in conjunction with my two meter rig.

When there is a good signal the copy on the AEA CP-1 is about 99%. THe filtering ability is outstanding.

The design and the packaging of the AEA CP-1 is very impressive and makes a very nice addition to the Ham shack.

I found that the Hamsoft and Hamtext programs work very well on the CP-1.

The AEA CP-1 manual was very detailed and I found the schematics to be extremely detailed. I had no difficulty in interfacing the CP-1 to my Vic-20 at all. The troubleshooting guide, though unnecessary, to me, seems like it can handle any problem extant. It is also a good idea to have their telephone number,printed in the instruction manual, as they do,and not have to write to Japan or other far away places for answers to your questions or for service.

I have not tried the AEA CP-1 on the HF bands so I can't make any constructive criticism now. I prefer two meters because of the traffic nets. We have daily nets on and being able to communicate with friends on a simplex frequency is also enjoyable.

I hope that the OM Stan, WA6ZKD does not soon find out how much fun I am having with the CP-1....I may not want to share HI HI.
73, 88, de Emily, WA6ZKC..

UOOOOOOOOOOOOOOOOOOOOOOOOOOOOOOOOOOOOO

HAM HELPS

Bob Wallace, W9STA/2, 386 Ft. Washington Apt 3D, New York, NY 10033. Wants information on RTTY Traffic any net in the midwest or east would be appreciated.

Sheldon Davis, W3FVU, 98 Rex Avenue, Indiana, PA 15701 has a TS-820S with a HAL CT 2200 and a KB 2100 keyboard with a M-19 for hard copy. He also has a Microline 80 (parallel) printer that he wants to connect to his CT 2200 for hard copy? Anyone out there with help or info for these problems?

OOOOOOOOOOOOOOOOOOOOOOOOOOOOOOOOOOOOOO

A VIC PRINTER FOR THE DO-IT-YOURSELFER

It might seem strange that a peripheral device for a computer actually can cost more than the computer itself. Yet that's often the case with the VIC-20, which can be bought for under $100.00.

A printer is a useful peripheral, but it's not absolutely necessary. It would be nice to have one for producing listings of Basic programs and other relatively simple data lists, also to have a printer for RTTY hardcopy would be nice, but in most other cases the video display handles the input|output situation adequately.

Is there a cheap printer that can serve limited purposes?

For years the workhorse of the minicomputer industry was the venerable M-33 ASR Teletype.

The Model 33 ASR teleprinter is a serial device, with integral keyboard and printer, that uses the ASCII code. It is designed to operate at 110 baud and may be configured for RS-232 voltage levels or 20 mA current loop.

The best part of the 33ASR is that it can be found as a surplus item for a price of around $75.00 at Ham/Com events. That's enough to warm the heart of Scrooge himself!

The next question, of course, is: How does the 33ASR work with the VIC-20? With a simple interface (it is really quite simple) and knowledge of some of the inner workings of the VIC, you can find out.

PRINTER REQUIREMENTS

The first task is to locate a 33ASR for the job. The 33ASI can be found in various types of configurations: unfortunately, this may cause some confusion for the neophyte.

The basic requirement for the 33ASR in this application can be stated simply. It must be configured for 20 mA operation.

A large number of 33ASRs retired from service are already set up for the 20 mA operation. In these cases, no modification will be necessary. However, you may encounter one that is set up for RS-232 or something else. Your best bet is to have someone familiar with internal wiring make the necessary change to 20 mA.

The 33ASR should be set up for 20 mA operation with two wires (which form the 20 mA loop) brought out of the machine for interfacing purposes.

Note that when the ends of the two wires are touched together, the machine will revert from the space mode. In other words, it stops "clunking" and starts "humming". This is a good preliminary check to see if your machine is working okay. The next step is to interface it to the VIC.

INFO-TECH PRESENTS:

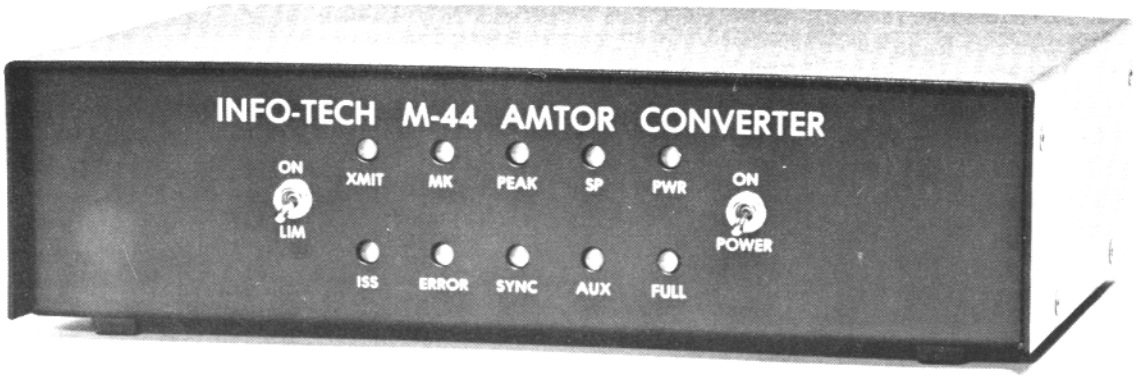

THE M-44 AMTOR CONVERTER

Features:
Usable with most ASCII or Baudot video terminals
Fully programmable from keyboard
Built-in, high quality, modulator & demodulator
TTL and RS-232 interfacing levels
Commercial quality construction
Designed & built in the USA
Suggested List Price $379.95

DIGITAL ELECTRONIC SYSTEMS
1633 WISTERIA COURT, ENGLEWOOD, FLA 33533

VIC INTERFACE

The interface circuit from the VIC-20 to the 33ASR is shown below. Power is tapped directly from the VIC; little current is needed. Only a few parts are required for the circuit. They should be readily available at your local parts store for a dollar or so. All resistors are 14-watt, ten-percent carbon types. The transistors and diode are common general purpose items.

The interface is connected between the VIC-20 user port and the 33ASR as shown. It will be powered up automatically when the Vic is turned on. I suggest that a 24 pin edge connector be connected to the user port. Do not solder directly to the VIC board. (This is a cheap design but we have to draw the line somewhere.)

Mount the circuitry of the interface on a small PC board and install it in a convenient place. Use care in laying out parts and check your work closely. If everything looks okay, plug it into the user port and the 33ASR, and proceed.

When power is applied, the 33ASR should begin humming. If it does not reverse the leads to the 33ASR. If you cannot get the 33AST to hum, your circuit probably needs work.

PRINTER SOFTWARE

One fact you may not know is that the VIC has serial I/O routines already implemented in ROM. It's just a matter of calling these routines to output data to the 33ASR. The best way to accomplish this is to open a channel (via RS-232 software in ROM).

A simple program to generate a listing of a Basic program stored in your VIC is shown here.

To open the channel and list program on 33ASR, type:

```
OPEN 128,2,3,CHR$(163)+CHR$(160):CMD128
:LIST
```

To close the channel and return to video screen:

```
PRINT#128:CLOSE128
```

This program may be entered anytime, provided the RS232 software sets up buffers in the top 512 bytes of RAM.

There are ways around this. One is to reserve 512 bytes of RAM. I saved 512 bytes of RAM by following the instructions at the start of the Basic program-POKE 52, 28 : POKE 56,28.

Any questions? Write to George Steber, 9957 N. River Road, Mequon WI 53092.

Reprinted with permission from MICROCOMPUTING, July 1983.

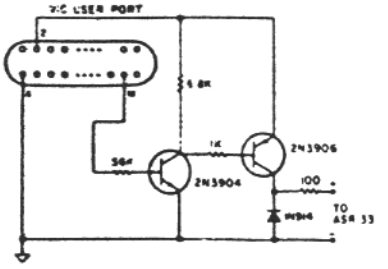

CLASSIFIED ADS

30 words $3.00, additional words 5 cents each - Cash with copy. Deadline 1st of month for following month.

MODEL 33 RO'S (Receive only) $100.00. KSR (Keyboard Send-Receive) $115.00. Units are less stands with standard private line electronics (UCC 6) 20 or 60 Mil loop strapable. Model 33 ASR's $130. Model 32 (5 level) RO $115, KSR $125, ASR $139. Standard UCC 5 Private Line Electronics 20-60 Mil. All units sold as is but have been fully tested line and local prior to shipment and checked for any visable ware. Used stands for M 33 and 32 Terminals complete with hardware $15 ea., with casters $25 ea. Parts available both new and used for M-33 and 32. Call or write reference your needs. (Please try to cite part numbers). Paper for above units $1.60 per roll G/W grade ribbons $1 ea. M-33 schematic sets $11 ea. M-33 manuals 3 Vol. sets $25. 8 level or 5 level tape $1 per roll. Sprocket form paper 9½ x 11 with tear away perfs. $35 per box 3000 forms. Cable ties 5" strong nylon, 100 for $1.50. Good used RS232 connectors male or female removed from equipment and cleaned without hoods $1.60 with hoods $2.50. T & B 25 pin ribbon type $3.25 ea. RS232 Interface installs into UCC 5 or UCC 6 with instructions good used $40. New $129. Video recording tape boxed used but good $5 ea. 7" reel. Used M-33 and 32 copy holders #182036 $4 ea. Chad box #182965 $2.50. Platten #185877 resurfaced like new $16 ea. Motors good used #182241 or 181870 $19 ea. UCC 6 good used $30 ea. Many parts available. Call or write about your needs. All items subject to prior sale. New York residents add applicable sales tax. All items FOB Bayshore, NY. COD orders are accepted. When enclosing payment with order, please enclose exact amount for items purchased. Shipping costs will be COD BEST WAY (Cheapest) unless otherwise stated in your order. Please reference AD 300 P when ordering from this list. Thank You. Tram Teletypewriter Service 50-0 Corbin Ave., BayShore, NY 11706. (516) 242-5011 or Telex #645890.

FOR SALE:TELETYPE M-32ASR with 60 WPM gears ready for Amateur use. All machines in good condition $25. KL7HDY, Bob (907) 563-6209.

BUMPER STICKER- "My Favorite Radio Station is (your call sign)." Display on car, in shack, anywhere! Nice gift for Ham friends. Only $3 ARPRESS, 1556(R) Hicks Pike, Walton, KY 41094.

WANTED: TELETYPE SPARE PARTS and/or unused Teletype equipment and sub-assemblies. Any quantity, model 28,35, 37,40,43. Send list for best offer to: Morris Precision Parts CO., Box 157, Morris Plains, NJ 07950 or call 201-993-9669.

AMTOR-AMTOR-AMTOR-AMTOR-AMTOR-AMTOR The new HAL ARQ1000, Error Correction Terminal, will provide no compromise AMTOR capability for your RTTY station. This full featured unit must be seen in operation to be appreciated. For full details write or call Dick, KØVKH, DIALTA Amateur Radio Supply, 212-48th St., Rapid City, SD 57701. (605) 343-6127. All of your HAL and INFO-TECH equipment needs. Our prices cannot be beat!

PC BOARDS*VERSATILE CKTS RTTY and SSTV Higest quality double sided plated through hole PC boards with silk screened legend. GUARANTEED. Complete instructions and parts ordering information. Assembly service available. Send SASE for information to:DYNAMIC SPECIALTIES, POB 20903, San Jose, CA 95160.

*** DISK DRIVES - the HAL DS3100*** Now you can have almost unlimited mass storage with your DS3100ASR! Over 326,000 bytes on two diskettes with the new HAL DSK3100. If you are into traffic handling, then the DSK-3100 will make those long traffic runs a snap for you. Call or write DICK, KØVKH, DIALTA Amateur Radio Supply, 212-48th St., Rapid City, SD 57701 (605) 343-6127. All of your HAL and INFO-TECH equipment needs. Our prices cannot be beat!.

NEWS-NEWS-NEWS Amateur Radio's Newspaper"WORLDRADIO". Year subscription is $9.00. Send to: WORLDRADIO, 2509-F Donner Way, Sacramento, CA 95818.

SELL OR TRADE: Mint HEATH dot matrix printer $130 or trade for tabletop M-28 RO RTTY machine. Pick-up NY, NJ, CN area. H. Parks, 24 Caryl Ave., 6C, Yonkers, NY 10705. (914) 963-0689.

HAM RADIO MAGAZINE. The no nonsense state-of-the-art technical magazine. Subscribe and see for yourself. 1 year $19.50 US. Canada and foreign surface $21.50, Europe, Africa & Japan $28.00 Ham Publishing Group, Greenville, NH 03048.

WORLD RADIOTELETYPE FREQUENCY LIST-9th edition by Joerg Klingenfuss (FRG). New list of 2463 frequencies monitored in 1983. Frequency, call sign, name of station, ITU country symbol, times of reception and other details are included. All types of RTTY stations are listed-press, aero, weather, telex, military, diplomatic, maritime and others. New 9th edition now had hundreds of commercial SITOR-SPECTOR (AMTOR) and FEC stations listed. 86 meteorological stations on 279 frequencies are included. 438 RTTY abbreviations. Authorized by Klingenfuss in USA. $12.95PP USA and Canada. Send for free RTTY list of Publications, Universal Electronics, Inc., 4555 Groves Road, Suite 3A, Columbus, OH 43232.

FRED SAYS: "Cash in those unused teleprinter repaair parts." Trade, too! Send SASE for list of parts, supplies, gears, manuals, tools, toroids. Fred Schmidt, N4II, TYPE-TRONICS, Box 8873, Ft.Lauderdale, FL 33310. 305-583-1340 after 9 PM.EST.

VIC 20

3 Position Expander	$29.95
Cartridge board for VIC 20 (fits 1-2732 or 1-2764)	9.95
Cassette Interface for VIC 20 (use your own cassette Player)	15.95

COMMODORE 64

4 Position Expander	$49.95
Cartridge board for 64	9.95
Cassette Interface for 64	15.95

ATARI 400/800

48K RAM Expansion for 400/800	$89.95
Cartridge board for 400/800	9.95
Cassette Interface	17.95

Send $1.00 (refundable) for our Catalog or send a stamp for our current flyer. Please add $2.00 per order for shipping.

VISA — MC — CHECK — COD

Daytapro Electronics, Inc.

3029 N. Wilshire Ln.
Arlington Heights, IL 60004
312-870-0555

VISA MasterCard

VIC20 and Commodore 64 are Reg. Trademarks of Commodore Electronics Limited. Atari is a Reg. Trademark of Atari, Inc.

CLASSIFIED ADS CONTINUED

GONE COMPUTER-SELL 28ASR with TD, typing reperf, select call, UT4,DDTMG RTTY scope, all documentation. Control entire station except frequency, from panel above TD on ASR. DDTMG and scope enclosed in ST6 cabinet. Excellent condition. $400 or? WB9OUM, RT I, Box 700, Flagstaff, AZ 86001

PC BOARDS * VERSATILE CKTS RTTY and SSTV. Highest quality double sided plated through hole PC boards with silk screened legend. GUARANTEED.Complete instructions and parts ordering information. Assembly service available. Send SASE for information to: DYNAMIC SPECIALTIES, POB 20902, San Jose, CA 95160.

FOR SALE:MICROLOG ATR 6800 with Mailbox and extra Basic, HAL RTTY scope, All 6 months old,in original cartons. Cost $3000. $2000 for both. Nicholson KD4IA, 904-829-5003 days.

FOR SALE:SEVERAL MODEL 32ASR Teletype machines complete with stands in good working condition. Ideal for hard copy. Bob KL7HDY (907)563-6209.

A WORD ON AMTOR FROM ITALY

I read the article on AMTOR by W1-ZWA in the September issue of the JOURNAL. I think that Paul has not tried or seen any AMTOR equipment run. Maybe he has a lot of problems that don't exist. The equipment (very much in use in Europe is the MK2), it is cheaper, easy to connect to the old or new RTTY gear. No sophisticated equipment is required. Naturally the gear unit, as the transceiver and the demodulator, have to respond to some requisites. The speed of the transceiver's relay is indispensable for going quickly from receive to transmit mode and vice versa. Other necessities are the level of input and output signal of the demodulator. (That for the MK2 is TTL level, and not more).

I would like to clarify that in AFSK mode neither VOX nor break-in is required from the transceiver because the system runs as a normal transmission going from the TX mode to RX mode by the PTT line of the transceiver driven by the MK2 card.

Aside from these technical and economic problems, it must be considered whether or not the Amateur operator will like the system. However, I do feel that it will be accepted. The QSO in the AMTOR system establishes a good relationship between the two distant stations. You are always aware that your friend is reading your message (one small lamp tells you this and another informs you that there is interference, etc.), while he if you are writing or pausing for a drink??? But no characters are missed, and on your paper or monitor appears only the correct characters. No noise or other RTTY stations can disturb your QSO. You don't need much power, I run in Europe with no more than 10 watts, and America with 15 watts is very near! To operate it is not as complicated as you would imagine. Master and slave are only words to help speed up syncronization between the two stations. To call CQ or a friend is easy and needs little preparation. To answer them is downright automatic. "HOW COPY?" or "..are you there Ted?" by AMTOR are obsolete questions, because the you are are continually following the situation of both stations. If you need a quick communication, you can break-in by pressing a button without waiting for the end of the message. You can quickly and continually pass between the old RTTY system to AMTOR mode and back by a simple switch.

If you also have a computer unit you cannot hope for more. I am running with an MK2, an Apple II, a Drake TR-7 and a HAL ST-6000 and I am very satisfied. However, the benefits and pleasures of this system can only be appreciated by using it.

Try it on 20 meters and Ciao.
NOTE: The above letter is signed by an Italian that believes AMTOR is not legal in Italy as yet so must remain anonymous. If you wish to write to him I shall be pleased to forward your letters and comments. de DEE....

CLASSIFIED ADS CONTINUED

RTTY FOR SALE: Model 34ASR (Model 28 ASR in M-35ASR cabinet) $495. 3-Model 35KSR's $245 each. 2-Model 33KSR's $200 each,1-32ASR $200, 1-28KSR $245. Send SASE for complete list and prices. Lawrence R.Pfleger,K9WJB, 2600 S. 14th St., St Cloud, MN 56301. Phone (612) 255-9794.

MAILBOX CONTINUED

that is, information FOR the remote user. It simply tells you that it is capable of receiving text, receives that text, and repeats the cycle.

The next step in MSO evolution allows the REMOTE user to 'command' the MSO, thus providing the capability to activate, utilize and de-activate several functions in one system. The MSO 'talks back' to the remote user, informing the user of such items as what messages are stored in memory, what commands are available to the remote user, and even what mistakes tthe remote user has made while utilizing the system. Most significantly, it permits the remote user to retrieve previously stored information or messages in its memory device and to store information or messages in its memory. These two actions are what really separates the 'men from the boys!" In most cases these MSO's are computer based, some being controlled by personal computers with "MSO software", and others being 'dedicated' RTTY systems, computer based, but dedicated only to MSO service. Each has advantages and disadvantages, and this author declines to debate the virtues of either. As with automobiles and religion, we each have our favorites, and the purpose of this column is to provide information concerning use of these systems, and not to extol the virtues of any one system.

Earliest versions of these MSO's contained memory banks of RAM, in somewhat limited size. With some units, power outages, power line spikes and other anomalies caused loss of RAM data at times. This was, and is, frustrating to both System Operators (SYSOP's), and remote users alike. Fortunately for all, battery back-up devices, RAM that retains its memory when power is off, and computer disk drives are now used, and in these most sophisticated of all devices, MSO amnesia is a thing of the past!

This concludes a bit of past history concerning MSO's. It most certainly is neither complete nor comprehensive, but, designed to give a brief history of events and to whet your appetite for the future. Where to 'find' them next month.
Let's hear from you. DE: Dick, KØVKH.

MPC-1000R BY DOVETRON

MULTIPATH CORRECTION, IN-BAND DIVERSITY, SIGNAL REGENERATION, UP-DOWN SPEED CONVERSION, 200 CHARACTER FIFO MEMORY, KEYBOARD-CONTROLLED WORD CORRECTION & DIGITAL AUTOSTART

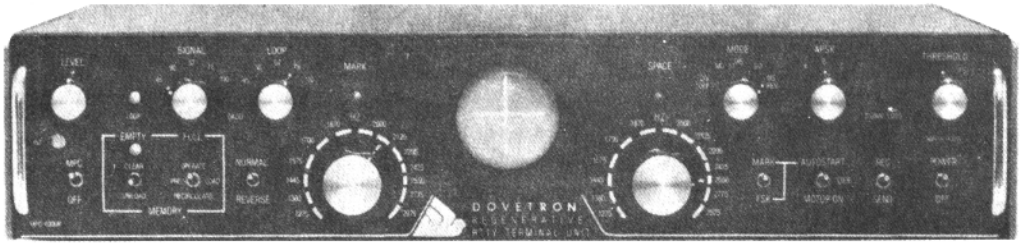

THE MPC-1000R REGENERATIVE RTTY TERMINAL UNIT

The DOVETRON MPC-1000R is a complete Transmit-Receive modem designed for optimum radio teleprinter communications on land, sea and in the air.

Standard features include a high level loop supply and keyer (neutral or polar), EIA and MIL FSK outputs, a phase-continuous AFSK Tone Keyer with three selectable Mark - Space - Shift tone pairs, Mark, FSK & Digital Autostart, Automatic Markhold, an internal RY Generator for terminal unit Self-Test and circuit adjustment, and a Signal Loss Alarm circuit.

The MPC Series is available in six different models to meet your exact requirements.

Complete specifications are available on your request, or call 213-682-3705.

DOVETRON

627 Fremont Avenue
South Pasadena,
California 91030, U.S.A.

RTTY Journal

EXCLUSIVELY AMATEUR RADIOTELETYPE

P.O. BOX RY

Cardiff by the Sea, CA 92007

SECOND CLASS PERMIT PAID
AT ENCINITAS, CA 92024