HIGH SPEED
TAPE PUNCH
AND
TAPE READER

Return to: R W Frede
305 Michigan

TELETYPE
CORPORATION
Chicago, Illinois

TELETYPE

SYMBOL OF
LEADERSHIP
IN PRINTING
TELEGRAPHY

TELETYPE HIGH SPEED TAPE PUNCH

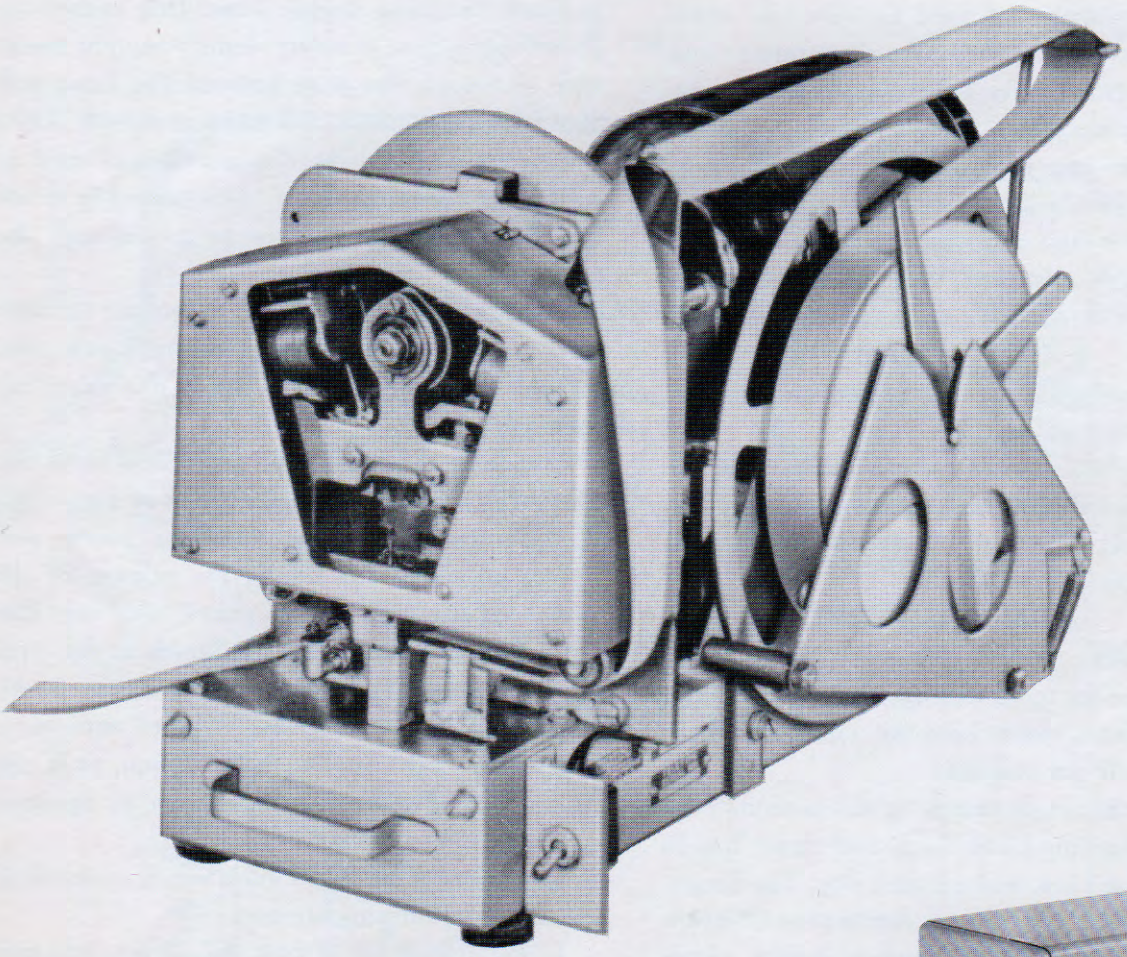

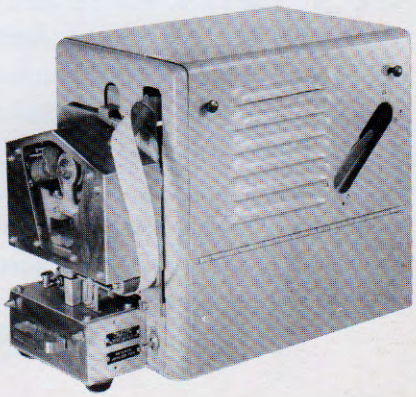

Tape Punch with Cover

TELETYPE HIGH SPEED TAPE PUNCH

DESCRIPTION

The Teletype High Speed Tape Punch is designed to record, in punched tape, data from high speed systems such as computers, calculators, business machines, and telegraph systems. It punches tape at speeds up to 60 characters per second.

The Punch can be supplied for 5, 6, or 7 hole codes. It will perforate a single tape, or two tapes simultaneously.

Each code hole has an associated code punch controlled by its own magnet. An additional magnet is used to govern the tape feed-out mechanism. Thus, six magnets are used for five-hole operation; seven magnets for six-hole operation; and eight magnets for seven-hole operation. All magnets must be energized simultaneously.

The Tape Punch consists of the punching mechanism, motor and base. Optional equipment is a protective dust cover for the motor and drive mechanism. Cover has window for checking tape supply, is available in a variety of color finishes.

Single or double tape reels can be supplied as part of the base unit.

The motor is a standard synchronous type, for operation on 110-120 volt, single phase 60 cycle regulated A.C. power supply. Its operating speed is 3600 r.p.m.

OPERATION

The figure on the opposite page shows two punching mechanisms, one behind the other, with their respective selector magnets.

Each of the seven punching mechanisms consists of a Blocking Pawl, Long and Short Toggle Arms, a Drag Link, and a Punch Pin. The Eccentric Main Shaft generates a continuous 60 cycle per second reciprocating vertical motion which is transmitted to the Punch Bail by means of the Punch Bail Drive Link. This motion is then transmitted from the Bail to all seven Toggle Arms, Drag Links, and finally to the Punch Pins. The total peak-to-peak displacement of the vertical motion is .090".

The Eccentric Main Shaft is shown in the lowermost position. Note that the Long Toggle Arm of the outer mechanism has cleared its Blocking Pawl as a result of its Selector Magnet Spring being energized, and that the Long and Short Toggle Arms behave as one stiff member, transferring the complete displacement of the eccentric to the Punch Pin. This complete displacement is sufficient to drive the Punch Pin through the paper tape.

The Selector Magnet for the other mechanism is shown de-energized, causing its Blocking Pawl to block the Long Toggle Arm. This causes the Long Toggle Arm to rotate slightly counter clockwise, throwing the joint between the Long and Short Toggle Links to the right as shown. Thus, since part of the drive displacement is used in collapsing the toggle joint, the Punch Pin is not driven a sufficient distance to go through the paper tape.

Identical linkages are used to operate the tape feed mechanism. Tape feeding is also selective, so that tape is fed only when a character has been perforated.

Obviously there is a timing problem involved. This requires (1) a storage register of some kind to hold temporarily the incoming pulses and (2) a provision for timing the release of the stored information to the punch magnets. The latter feature is built into the Punch in the form of a contactor. The storage register may be incorporated in the computer or other equipment which feeds information to the Punch, or it can be made available with the Punch as optional equipment.

The features of this Punch which make high speed operation possible are:

1. *Positive drive in both directions,* into and out of the tape. This provides controlled motion throughout the complete cycle and does not depend on spring-loaded mechanisms.
2. *Simple harmonic motion.* Selection and punching are performed near the peaks of

the sinusoidal motion where velocities are low. The tape is also accelerated and decelerated smoothly.

3. *Continuous action.* The punching and feeding mechanisms are coupled to the motor continuously, rather than through clutches.

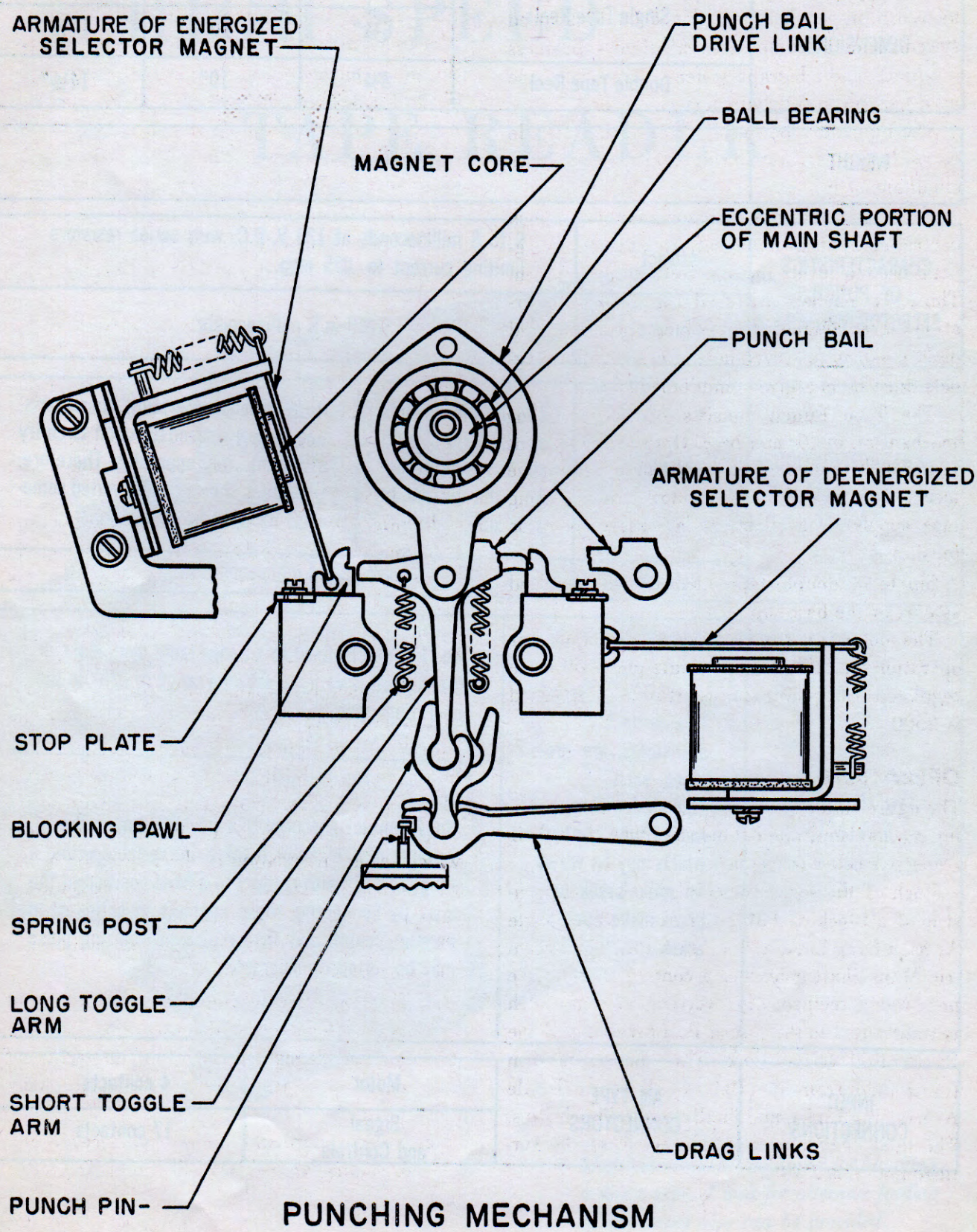

PUNCHING MECHANISM

TECHNICAL DATA
FOR
TELETYPE HIGH SPEED PUNCH

		Width	Height	Depth
DIMENSIONS	Single Tape Reel	6¾″	10″	14½″
	Double Tape Reel	8¾″	10″	14½″

WEIGHT	25 pounds

CHARACTERISTICS OF PUNCH SELECTOR MAGNETS	Attract	6 to 8 milliseconds at 120 V. D.C. with series resistors limiting current to .025 amp.
	Release	Within 6 milliseconds

CHARACTERISTICS OF FEED SELECTOR MAGNET	Attract	8 to 10 milliseconds at 120 V. D.C. with series resistors limiting the current to .025 amp.	Note: Magnet operating characteristics largely dependent upon circuitry of the auxiliary apparatus. Therefore, the values shown can be varied somewhat for specific applications.
	Release	Within 4 milliseconds	

SYNCHRONIZING CONTACTS	Two contact assemblies are provided, each equipped with a rocker type contact which may be wired for make-break or break-make operation.	**No. 1 Contact**—fixed to an adjustable disc. Make or break point is variable within a range of 225° in the operating cycle.
		No. 2 Contact—secured to a movable arm on the adjustable disc. Make or break point variable within a range of 170° with respect to a fixed position of the disc. By connecting these contacts in series or in parallel, length and timing of synchronizing pulse may be varied considerably.

INPUT CONNECTIONS	AN TYPE CONNECTORS	Motor	4 contacts
		Signal and Controls	17 contacts

TELETYPE HIGH SPEED TAPE READER

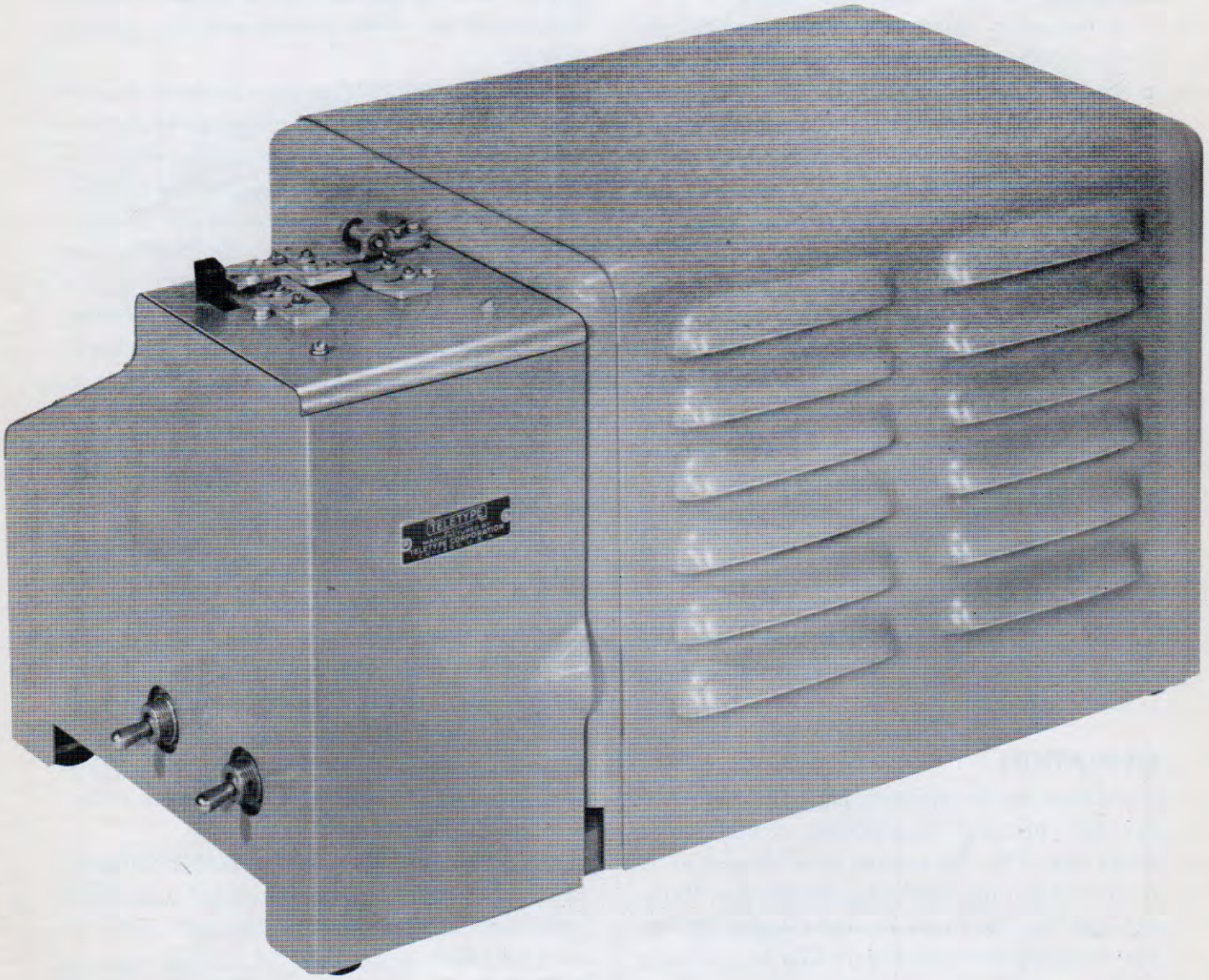

Model illustrated is equipped for handling a single tape. A unit for alternate feeding of two tapes also can be provided.

TELETYPE HIGH SPEED TAPE READER

DESCRIPTION

The Teletype High Speed Tape Reader is designed as an input device for computers, calculators, automatic control machinery, punched card equipment, and high speed telegraph systems.

The unit reads punched tape at speeds up to 60 characters per second and converts the code holes in the tape into electrical impulses. The impulses for each combination are then fed out simultaneously on a multi-wire basis.

A constantly rotating eccentric operates the feeding and sensing mechanism through a magnet-controlled latching mechanism. When energized, the magnet unlatches the feeding and sensing mechanism for continuous operation. The Reader can be stopped by de-energizing the magnet; when operating at 60 characters per second, the tape will stop within the period of one character.

The unit consists of the reading mechanism, motor, base plate, and cover. It can be supplied for 5, 6, or 7 hole codes; and can be furnished as either a single unit or equipped for alternate feeding of two tapes.

An end-of-tape contact is provided to stop the sensing mechanism when the tape has been completely fed through the tape gate. This contact is also used to control the alternate feeding of tapes in the double-unit model.

The motor is of the synchronous type for operation at 110-120 volt, single phase 60 cycle regulated A.C. power supply. Its operating speed is 3600 r.p.m.

OPERATION

The figure on the opposite page illustrates the operation of the sensing portion of the unit. It shows one of the five sensing pins, along with its associated Sensing Pin Spring, Switch Bar, Marking and Spacing Contacts, and Contact Spring. The Eccentric Drive and Main Bail are common to all sensing positions.

A vertical reciprocating type of motion is transferred to the Main Bail by means of the Bail Follower and Eccentric Drive. On the upstroke, the tape is sensed; on the downstroke, the tape is advanced to bring the next character into the sensing position.

The Sensing Pin extends through a hole in the Main Bail at Point A and rests on the Switch Bar Insulated Extension at Point B. At the other end of the Switch Bar is a contact assembly consisting of Marking and Spacing contacts. The Sensing Pin is shown in the down position, having been pulled there by the Main Bail. In this position the Switch Bar makes contact with the Spacing Contact.

As the Eccentric Drive starts the upstroke, the Main Bail is allowed to move up under the tension of the Main Bail Return Spring. When the Bail moves up it allows the Sensing Pins to move up under the force of the Sensing Pin Springs. If there is a hole in the tape, the Sensing Pin continues its upward motion, passing into the hole. The Switch Bar, which follows the Sensing Pin, rocks from the Spacing Contact to the Marking Contact as the Sensing Pin enters the hole in the tape. This completes a circuit from the Contact Spring, through the Switch Bar and out the Marking Contact, putting out a marking pulse. The Marking Contact remains closed for approximately 7.5 milliseconds out of the total operating period of 16.7 milliseconds.

If there is no hole in the tape, the upward motion of the Sensing Pin is halted by the tape and the Switch Bar remains on the Spacing Contact. In some cases it is desirable to take an output from both the Marking and Spacing Contacts, in order to provide complementary pulses. This is especially useful when it is necessary to recognize specific characters.

In addition to the five code Switch Bars there is a sixth Switch Bar, which puts out a marking pulse with every operation. The sixth pulse is used for blank recognition and control purposes in associated equipment.

On the downstroke, the Main Bail returns all Sensing Pins, Switch Bars, and Contacts to the

spacing position and advances the tape. The tape feed mechanism is basically a pawl and ratchet arrangement, lightened and refined to stabilize operation at high speeds.

An interesting feature of the feeding operation is that the Sensing Pins are still projecting through the holes at the beginning of the tape advance. The Sensing Pins yield to the forward motion of the tape until they are withdrawn from the holes, at which time they snap back to their normal position, ready to sense the next character. Thus a larger portion of the cycle is available for tape feed.

The features of this Reader which make high speed operation possible are:

1. *Small, lightweight parts.* Required force is reduced.
2. *Rocking motion of contact mechanism.* Contact bounce is eliminated.
3. *Tape wraps around 90° of tape feed sprocket.* A large number of teeth are engaged with the feed holes; hence more pulling power can be transmitted to the tape.
4. *Tape can be advanced while sensing pins are still in the tape.* This allocates almost half the cycle to tape feed.

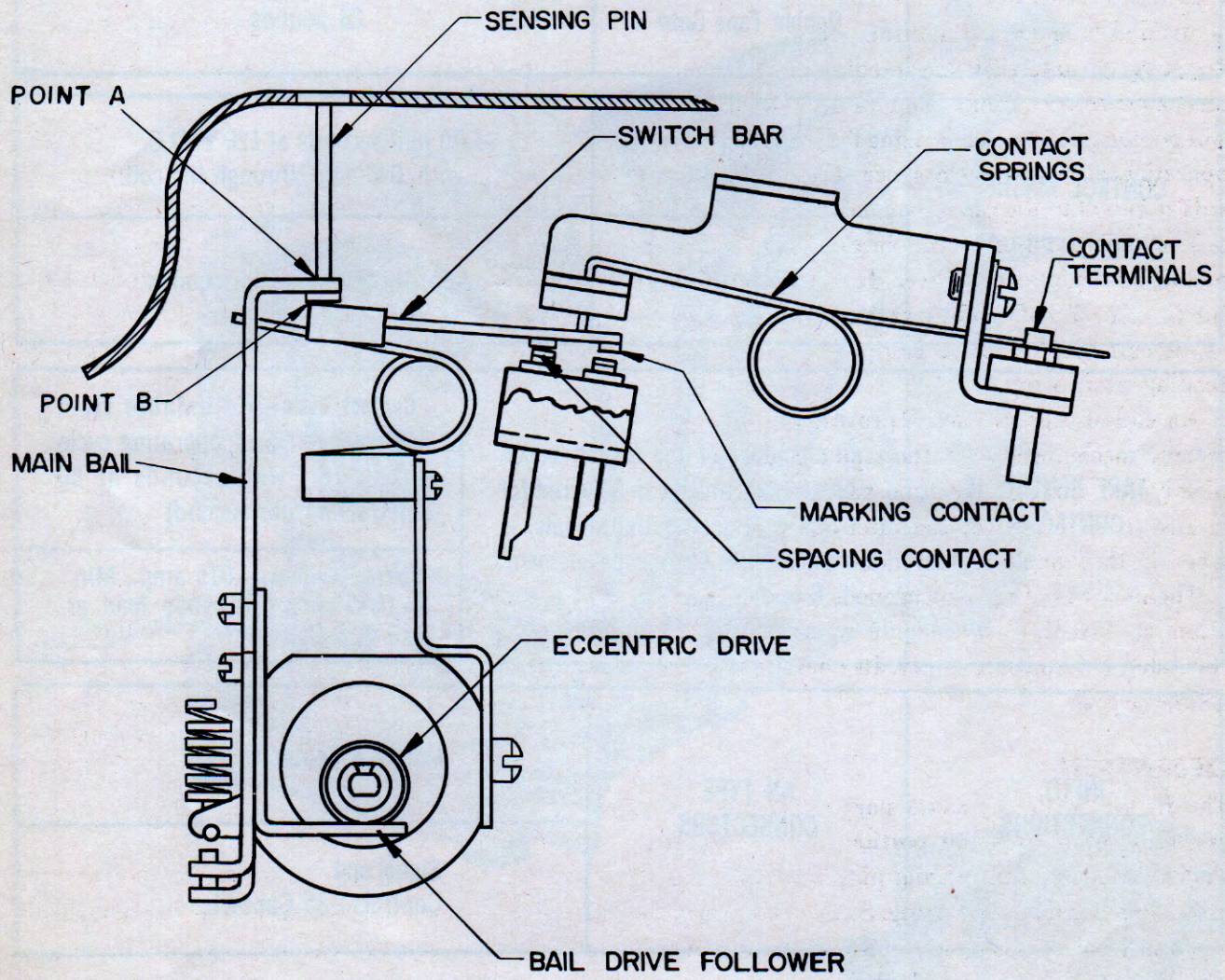

TAPE SENSING MECHANISM

TECHNICAL DATA
FOR
TELETYPE HIGH SPEED TAPE READER

		Width	Height	Depth
DIMENSIONS	Single Tape Gate	13½"	7⅜"	7¼"
	Double Tape Gate	17"	7⅜"	7¼"

WEIGHT	Single Tape Gate	22 pounds
	Double Tape Gate	26 pounds

CONTROL MAGNET CHARACTERISTICS	Attract	10 milliseconds at 120 V. D.C. with .090 amp. through the coil.
	Release	Approximately 6 milliseconds

TAPE SENSING CONTACTS	One contact of the rocker, make-break type, which can be wired for either polar or neutral signals, is provided for each code element. (5, 6 or 7)	**Contact Time**—Adjustable from zero to 100% of operating cycle (0 to 16.7 milliseconds at 60 characters per second)
		Current—Max.—.015 amp., Min. —.0015 amp.; resistive load at 120 V. D.C.

INPUT CONNECTIONS	AN TYPE CONNECTORS	Motor—4 Contacts
		Signal and Controls—35 Contacts

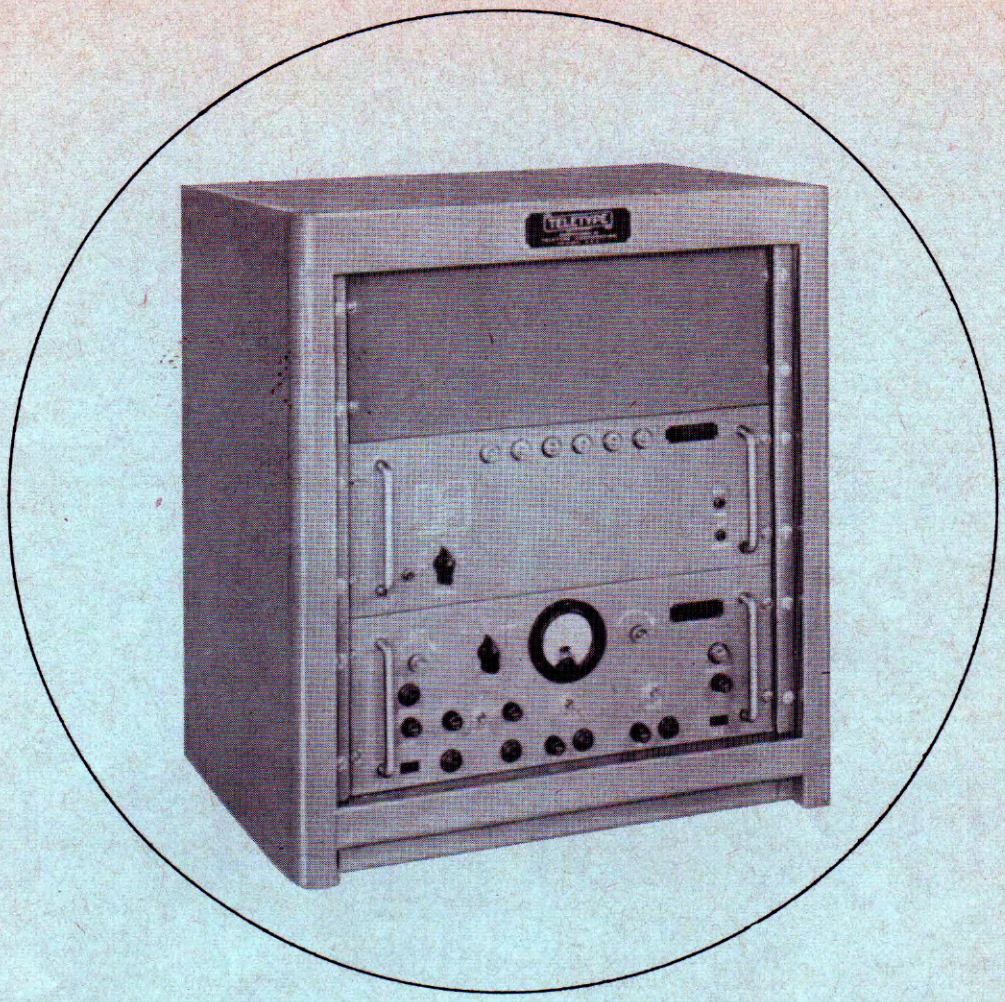

EQUIPMENT FOR LONG DISTANCE TRANSMISSION

Electronic converters are available for converting the parallel impulses from the Tape Reader to sequential electrical impulses for transmission, and, at the distant point, reconverting the impulses to parallel form prior to their being fed into the electronic storage register and then the Tape Punch

TELETYPE CORPORATION
SUBSIDIARY OF
Western Electric Company
INCORPORATED

SALES AND MERCHANDISING
4100 Fullerton Avenue
Chicago 39, Illinois
SPaulding 2-1040
TWX No. CG-105
Western Union service
on premises

GENERAL OFFICES
1400 Wrightwood Avenue
Chicago 14, Illinois
BUckingham 1-6200
TWX No. CG-277
Western Union service
on premises

WASHINGTON OFFICE
425 13th Street, N. W.
Washington 4, D.C.
MEtropolitan 8-1016
TWX No. WA-292

NEW YORK OFFICE
7 Dey Street
New York 7, New York
REctor 2-5651
TWX No. NY 1-1685

Printed in U. S. A.