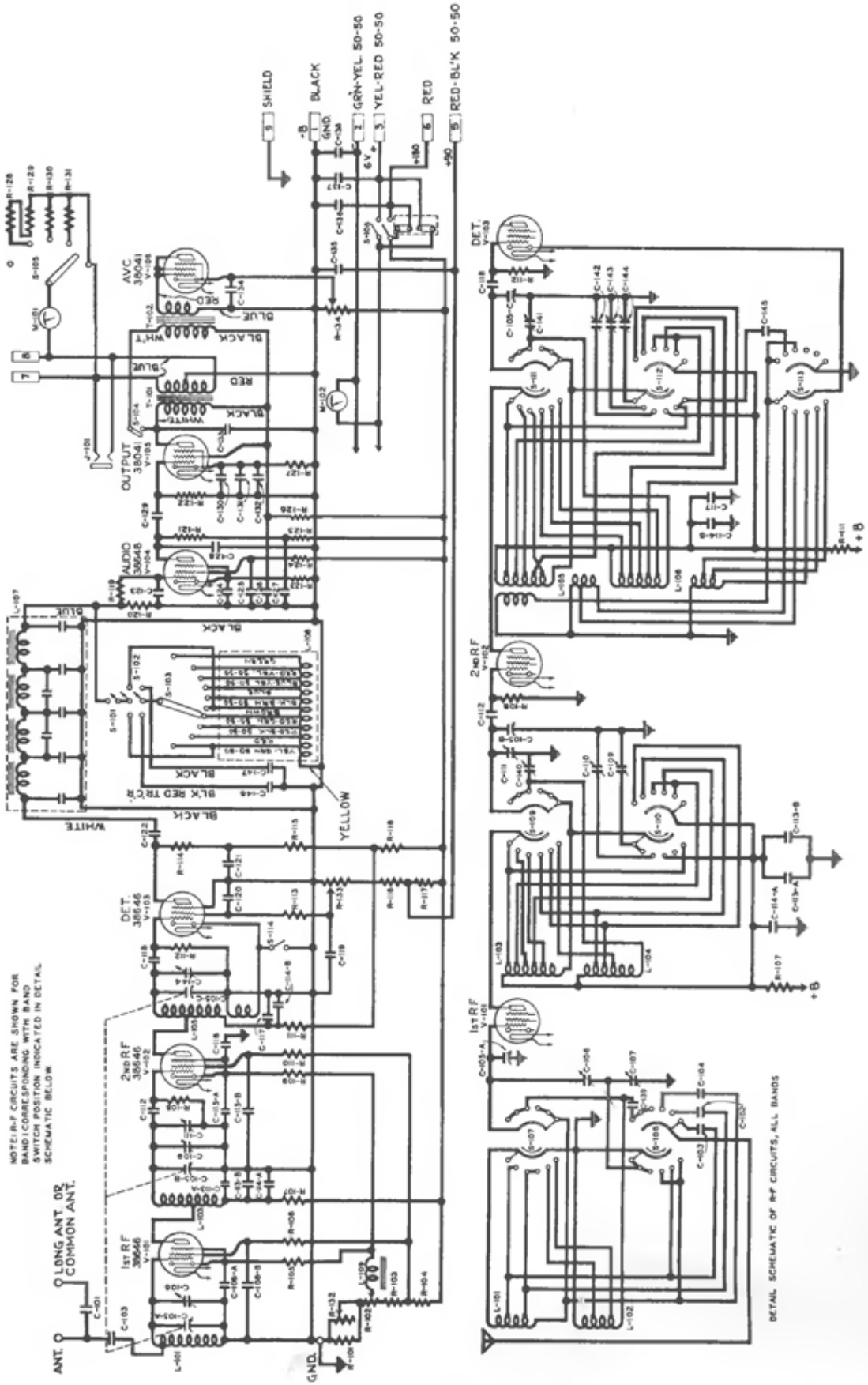

Figure 16—Schematic Diagram, Receiver Unit CRV-46044, T-601445