TM 11-2241

DEPARTMENT OF THE ARMY TECHNICAL MANUAL

FREQUENCY SHIFT CONVERTER CV-116/URR

DEPARTMENT OF THE ARMY • MARCH 1955

WARNING

DANGEROUS VOLTAGES EXIST IN THIS EQUIPMENT

Be careful not to contact high-voltage connections or 115-volt input connections when working on or near this equipment. When working inside the equipment, after the power has been turned off, always short-circuit the high-voltage capacitors.

DON'T TAKE CHANCES!

EXTREMELY DANGEROUS VOLTAGES

(POTENTIALS UP TO 620 VOLTS)

exist in

Frequency Shift Converter CV-116/URR

TECHNICAL MANUAL
No. 11-2241

DEPARTMENT OF THE ARMY
WASHINGTON 25, D. C., *28 March 1955*

FREQUENCY SHIFT CONVERTER CV-116/URR

		Paragraphs	*Page*
CHAPTER 1.	INTRODUCTION		
Section I.	General	1, 2	3
II.	Description and data	3-10	3
CHAPTER 2.	INSTALLATION	11-15	8
3.	OPERATION		
Section I.	Controls and instruments	16, 17	12
II.	Presetting and initial adjustment	18, 19	14
III.	Operation under usual conditions	20-23	15
IV.	Operation under unusual conditions	24-27	17
CHAPTER 4.	ORGANIZATIONAL MAINTENANCE		
Section I.	Preventive maintenance services	28-31	18
II.	Lubrication	32, 33	22
III.	Weatherproofing	34, 35	22
CHAPTER 5.	THEORY	36-50	24
6.	FIELD MAINTENANCE		
Section I.	Troubleshooting at field maintenance level	51-57	51
II.	Repairs	58-60	57
III.	Alinement procedures	61-63	67
IV.	Final testing	64-71	69
CHAPTER 7.	SHIPMENT AND LIMITED STORAGE AND DEMOLITION TO PREVENT ENEMY USE	72-74	74
INDEX			76

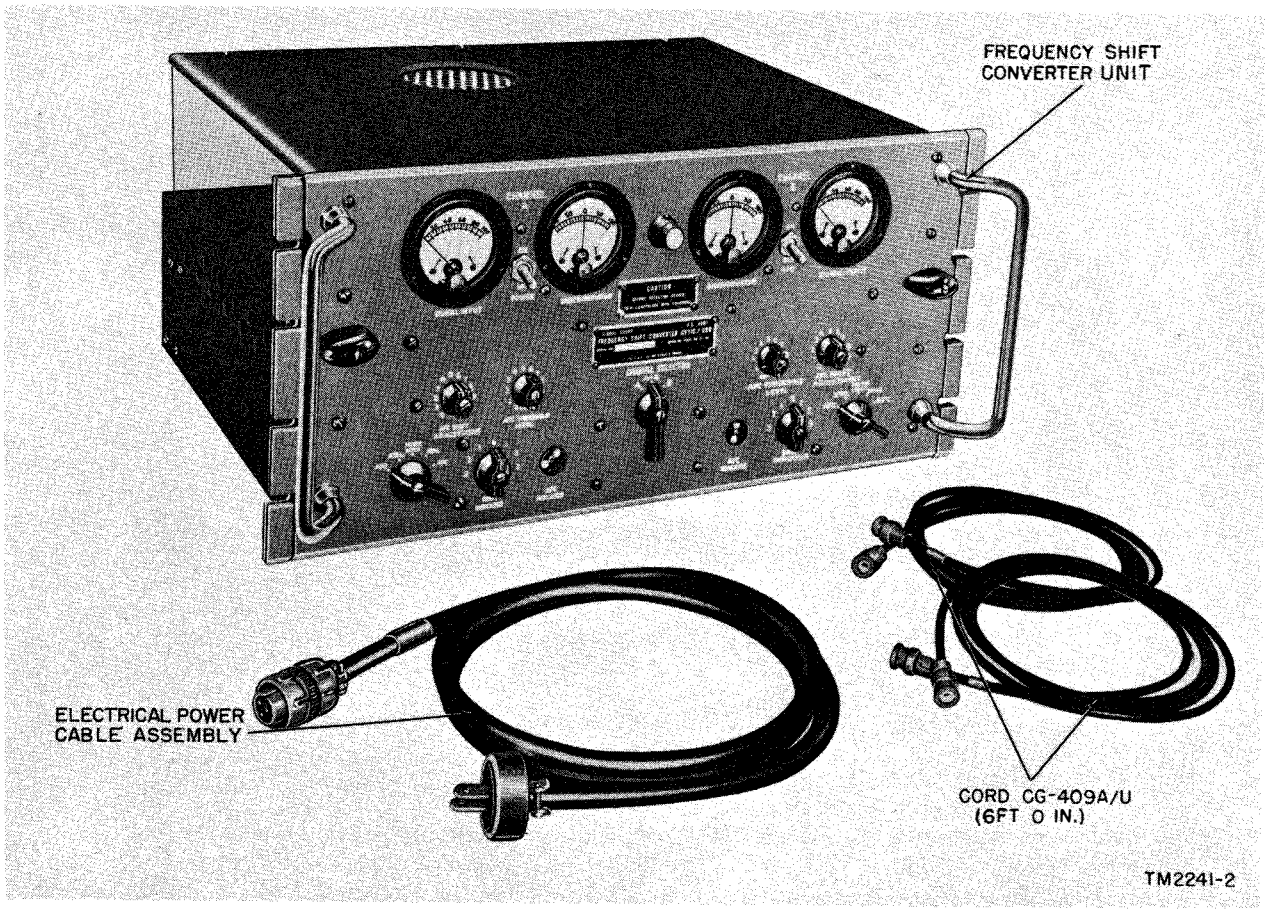

Figure 1. Frequency Shift Converter CV-116/URR.

CHAPTER 1

INTRODUCTION

Section I. GENERAL

1. Scope

a. This technical manual contains information on the installation, operation, and maintenance of Frequency Shift Converter CV-116/URR (fig. 1).

b. Comments on this publication should be forwarded directly to the Commanding Officer, The Signal Corps Publications Agency, Fort Monmouth, New Jersey, ATTN: Standards Branch.

2. Forms and Records

The following forms will be used for reporting unsatisfactory conditions of Army materiel and equipment and when performing preventive maintenance.

a. DD Form 6, Report of Damaged or Improper Shipment, will be filled out and forwarded as prescribed in SR 745-45-5 (Army); Navy Shipping Guide, Article 1850-4 (Navy); and AFR 71-4 (Air Force).

b. DA Form 468, Unsatisfactory Equipment Report, will be filled out and forwarded to the Office of the Chief Signal Officer as prescribed in SR 700-45-5.

c. DD Form 535, Unsatisfactory Report, will be filled out and forwarded as prescribed in SR 700-45-5 and TO 00-35D-54.

d. DA Form 11-238, Operator First Echelon Maintenance Check List for Signal Corps Equipment (Radio Communication, Direction Finding, Carrier, Radar), will be prepared in accordance with instructions on the back of the form (fig. 11).

e. DA Form 11-239, Second and Third Echelon Maintenance Check List for Signal Corps Equipment (Radio, Communication, Direction Finding, Carrier, Radar), will be prepared in accordance with instructions on the back of the form (fig. 12).

f. Use other forms and records as authorized.

Section II. DESCRIPTION AND DATA

3. Purpose and Use

a. The frequency shift converter unit (fig. 1) converts frequency-shifted signals into direct current (dc) output pulses that key the energizing loop circuit of automatic teletypewriter printers. This equipment is designed for continuous duty and operates from the intermediate frequency (if.) output of one receiver or from the output of two radio receivers (designated as Receiver A and Receiver B) operating in either a space- or frequency-diversity system. It is capable of translating frequency-shift radioteletype signals to neutral dc pulses only, at speeds as high as 100 dot cycles per second. Because the teletypewriter output connection of the converter does not match the input connection to a standard teletypewriter printer, an intermediate control unit is required between the converter and the teletypewriter printer.

b. The equipment consists of two separate radio frequency (rf) input channels which feed frequency-shift signals to a diversity section. In the diversity section, the two signals are combined and the result is converted from frequency-shift carriers to dc mark-space pulses. Each input circuit operates from the if. output of a radio receiver whose if. is within the range of 450 to 510 kilocycles (kc). One of the features of each converter channel is the automatic frequency control (afc) circuit, which tends to minimize loss of output or distortion in output teletypewriter (tty) signals if the received signals drift away from the normal frequency.

c. The converter has self-contained meters for measuring various currents and voltages through-

out the unit. The dc output in the diversity circuit produces a signal for neutral loop operation. The converter also has facilities to permit reversing the polarities of the output mark and space signals, and for establishing mark output signals for adjustment purposes.

4. System Application

a. Frequency Shift Converter CV–116/URR is a link in a complete radioteletype communications system. A typical system consists of a teletypewriter, a control unit, a frequency shift keyer, a radio transmitter and antenna in the transmitting section, and two radio receivers and antenna, a Frequency Shift Converter CV–116/URR, and a teletypewriter printer in the receiving section. The converter can be used with one radio receiver, or with two radio receivers operating in either a space-diversity or frequency-diversity system.

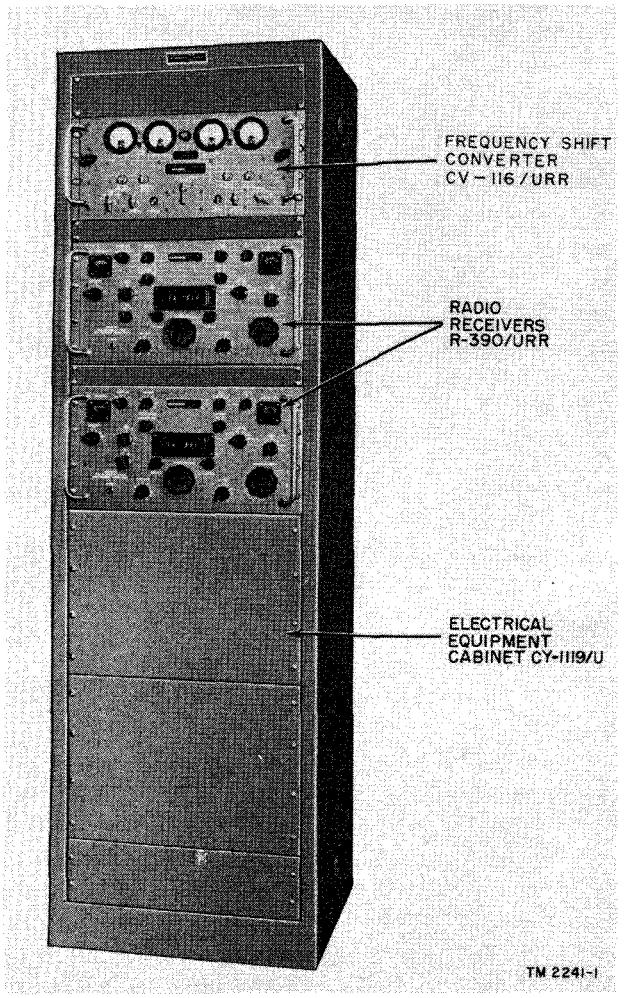

Figure 2. Frequency Shift Converter CV–116 in Radio Receiving Set AN/FRR–38.

b. Figure 2 shows the converter unit in a typical radio receiving set, Radio Receiving Set AN/FRR–38. Two Radio Receivers R–390/URR are used for diversity reception and the three units are housed together in Electrical Equipment Cabinet CY–1119/U. The block diagram in figure 3 shows the signal path through the receiving end of a typical radio teletypewriter communications system. Frequency-shifted signals are fed to each receiver from an associated antenna. At the receivers, conversion of the signals to an if. takes place and the if. signals are amplified. The if. amplifier output of each receiver is fed to its respective converter section. Both input sections, in turn, feed the diversity section where frequency-shifted signals are converted into dc pulses. These dc mark-space pulses are used to operate the teletypewriter printer. Normally, the output of the converter is fed to the tty through a control unit.

c. The CHANNEL SELECTOR switch located on the front panel permits selection of the output of either channel A or channel B, or the combined outputs of channels A and B for conversion to dc pulses in the diversity circuits.

5. Technical Characteristics

Converter if. center frequencies:	
Channel A frequency	50 kc.
Channel B frequency	29.3 kc.
Input frequency	450 to 510 kc.
Required minimum input voltage	100 μv.
Input frequency-shift range	150 to 1,000 cycles.
Input impedance	50 ohms (approx.).
Number of input channels	2.
Number of tubes	45.
Output	Mark 0.060 ampere. Space 0.0 ampere.
Power source required	115 volts, 50–60 cycles, single phase ac.
Power consumption	200 watts.
Weight	69 lb.

6. Packaging Data

a. When packaged for shipment, the components of Frequency Shift Converter CV–116/URR are placed in a moisture-vaporproof container (fig. 4). The size, weight, and volume of the case follows:

Height	11¾ inches.
Length	27 inches.
Width	22½ inches.
Volume	4.13 cu ft.
Approximate gross weight	110 pounds.

b. The following list indicates the contents of the case. See packing list attached to each case for exact contents.

Contents	Notes
1 Frequency shift converter unit	With tubes, pilot lamp, crystals and fuses.
2 Cords CG–409A/U	
1 Electrical Power Cable Assembly CX–2491/U.	
1 Running spares	See par. 9.
2 Technical manual 11–2241	

7. Table of Components

Component	Required number	Height (in.)	Depth (in.)	Length (in.)	Volume (cu ft)	Unit weight (lb)
Frequency shift converter unit	1	8¾	17	19	--------	65
Cord CG–409A/U	2	--------	--------	72	--------	0. 3
Electrical Power Cable Assembly CX–2491/U	1	--------	--------	72	--------	1. 1
Technical Manual 11–2241	2	11	¼	8½	--------	--------
Running spares (spare tubes, fuses, crystals, and pilot lamp)	1	--------	--------	--------	--------	--------

Note. This list is for general information only. See appropriate supply publications for information pertaining to requisition of spare parts.

8. Description

a. The frequency-shift converter unit (fig. 1) is a self-contained unit 19 inches long, 8¾ inches high, and 17 inches wide, weighing approximately 69 pounds. It has a gray aluminum-alloy panel, base assembly, a black dust cover, and it is designed for rack mounting.

b. The base assembly is fitted with file-drawer-type double-extension drawer slides which support the chassis-panel dust cover assembly when it is completely extended from its associated rack. This is to facilitate inspection, adjustment, and maintenance. Two handles extend forward from the sides of the front panel for use in withdrawing the assembly.

c. Input, output, and power connections are made by means of connectors located at the rear of the chassis (fig. 9). The converter can be completely extended for maintenance and adjustment purposes without removing the connecting cables.

d. All operating controls and meters are located on the front panel. When the dust cover is removed, the adjustment controls, used in preparing the unit for operation, and the test switches can be reached. The dust cover is held in place by four fasteners. Fuses and discriminator transformer adjustment screws are located at the rear of the unit.

e. Do not attempt to remove the converter without first disconnecting all cables at the rear of the chassis. The converter can be removed from its base assembly by loosening the knob fastener at each end of the front panel, sliding the chassis-panel dust cover assembly completely out, and lifting upwards.

9. Running Spares

The group of running spares supplied with each Frequency Shift Converter CV–116/URR is packed in a corrugated fiberboard box taped to the side of the internal flanged corrugated packaging tubing. Spares are provided for all normally expendable items such as tubes, pilot lamps, fuses, and crystals. Following is a list of running spares:

1 panel indicator lamp	1 tube, 6AQ5W
12 fuses, 3-ampere	4 tubes, 6AU6
1 crystal, 405 kc	1 tube, 6BA7
1 crystal, 425.7 kc	4 tubes, 5814
4 tubes, 5726	

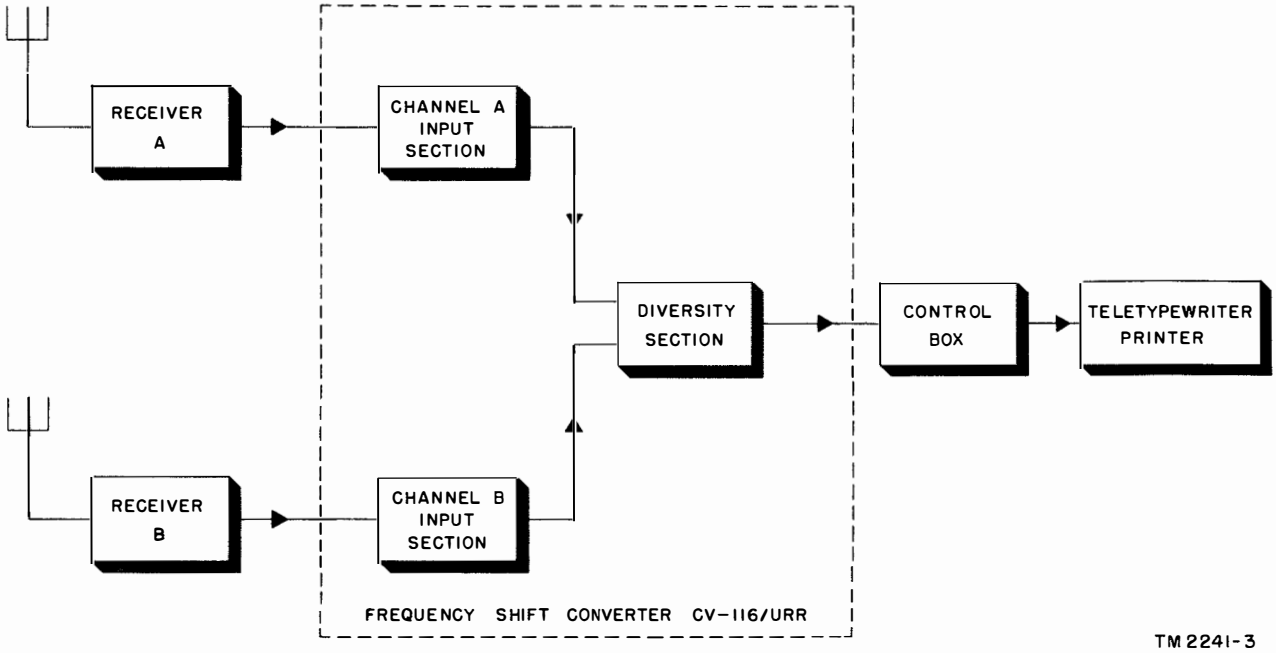

Figure 3. Radioteletypewriter communications reception system, simplified block diagram.

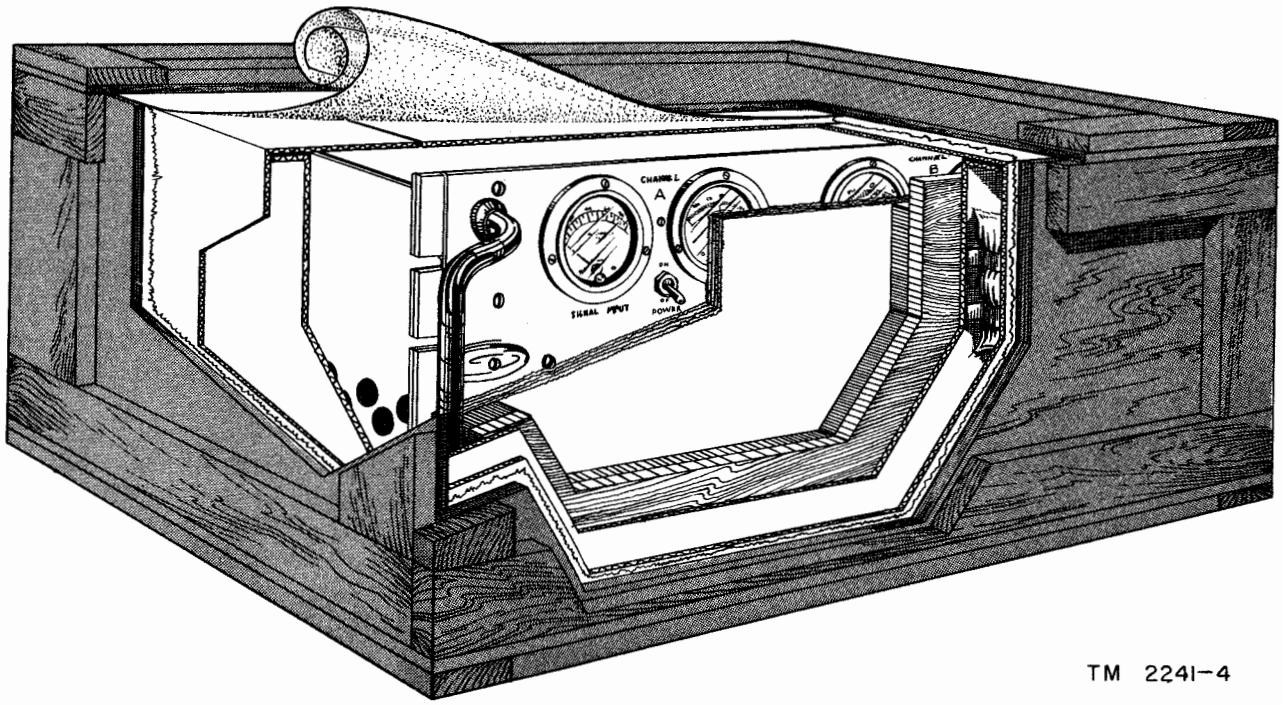

Figure 4. Frequency Shift Converter CV-116/URR packed for shipment.

10. Additional Equipment Required

Because the converter is part of a communications system, the other components of the system are required for operation. A typical receiving system would include the following equipment:

2 radio receivers and antennas. (1 required for single-channel operation.)

1 Frequency Shift Converter CV–116/URR.

1 Teletypewriter TG–7–B (receiving).

1 control unit or adapter connector (required to match the output connector of the converter to the input connector of the teletypewriter).

Additional crystals for crystal operation on a variety of receiver if. frequencies.

CHAPTER 2

INSTALLATION

11. Placement of Equipment

This equipment is designed to be rack mounted with two receivers. In a standard relay rack installation, it is suggested that one receiver be mounted above and the other below the converter to facilitate extension of the converter from the base assembly for servicing. Because the converter input cables (fig. 1) are 6 feet long, the receivers and the converter power source should not be more than 6 feet from the converter. The converter power connection must be made to a 115 v, 50–60 cycles per second (cps) single phase ac source. Power input connections and tty output connections are made at the rear of the chassis. Eight screws on the base assembly secure the equipment to the rack. See figure 6.

12. Uncrating, Unpacking, and Checking New Equipment

Note. For used or reconditioned equipment, refer to paragraph 15.

a. General. The equipment is shipped in a wooden packing case as in figure 4 When new equipment is received, select a location where the equipment may be unpacked without exposure to the elements and which is convenient for installation.

Note. Be careful when uncrating, unpacking, and handling the equipment; it is easily damaged. If it becomes damaged or exposed, a complete overhaul might be required or the equipment may be rendered useless.

b. Step-By-Step Instructions for Uncrating and Unpacking Shipments (fig. 5).

(1) Place the packing case as near the operating position as convenient.

(2) Remove the nails with a nail puller as shown in figure 5Ⓐ. Remove the top of the packing case. Do not attempt to pry off the top; the equipment may be damaged.

(3) Remove the outer cardboard carton from the case as shown in figure 5Ⓑ.

(4) Remove the equipment from the outer carton as shown in figure 5Ⓒ.

(5) Remove the moisture-vaporproof barrier from the inner carton.

(6) Open the inner carton as shown in figure 5Ⓓ, and remove the flanged cardboard tubing. Place the operating components and running spares on the work bench or near the final location.

(7) Inspect all equipment for possible damage incurred during shipment.

c. Checking. Check the contents against the master packing slips.

13. Installation

(fig. 6)

a. The converter unit is designed for rack mounting. It is secured to the rack by screws through holes in the side flanges of the base assembly.

b. Before installing the converter, make certain that the tubes (fig. 45) are firmly inserted in their sockets and that the proper fuses are inserted in the fuse holders (fig. 9).

c. To install the converter in the rack, first remove the chassis-panel assembly from the base assembly by loosening the knob fasteners at each end of the front panel and lifting upwards. Position the base assembly in the rack and secure it in place with the oval head machine screws and cup washers furnished with the rack as shown in figure 6Ⓐ. Extend the drawer slides, as shown in figure 6Ⓑ to replace the chassis-panel assembly in the base. Slide the converter into the rack and tighten the two knob fasteners (fig. 6Ⓒ and Ⓓ).

14. Connections

a. Connections between the converter unit, its associated receivers, the control box, and the tty printer vary, depending on whether one or two receivers are used. Typical conections are shown in figure 7. (Refer to TM 11–647 for if. output connections.)

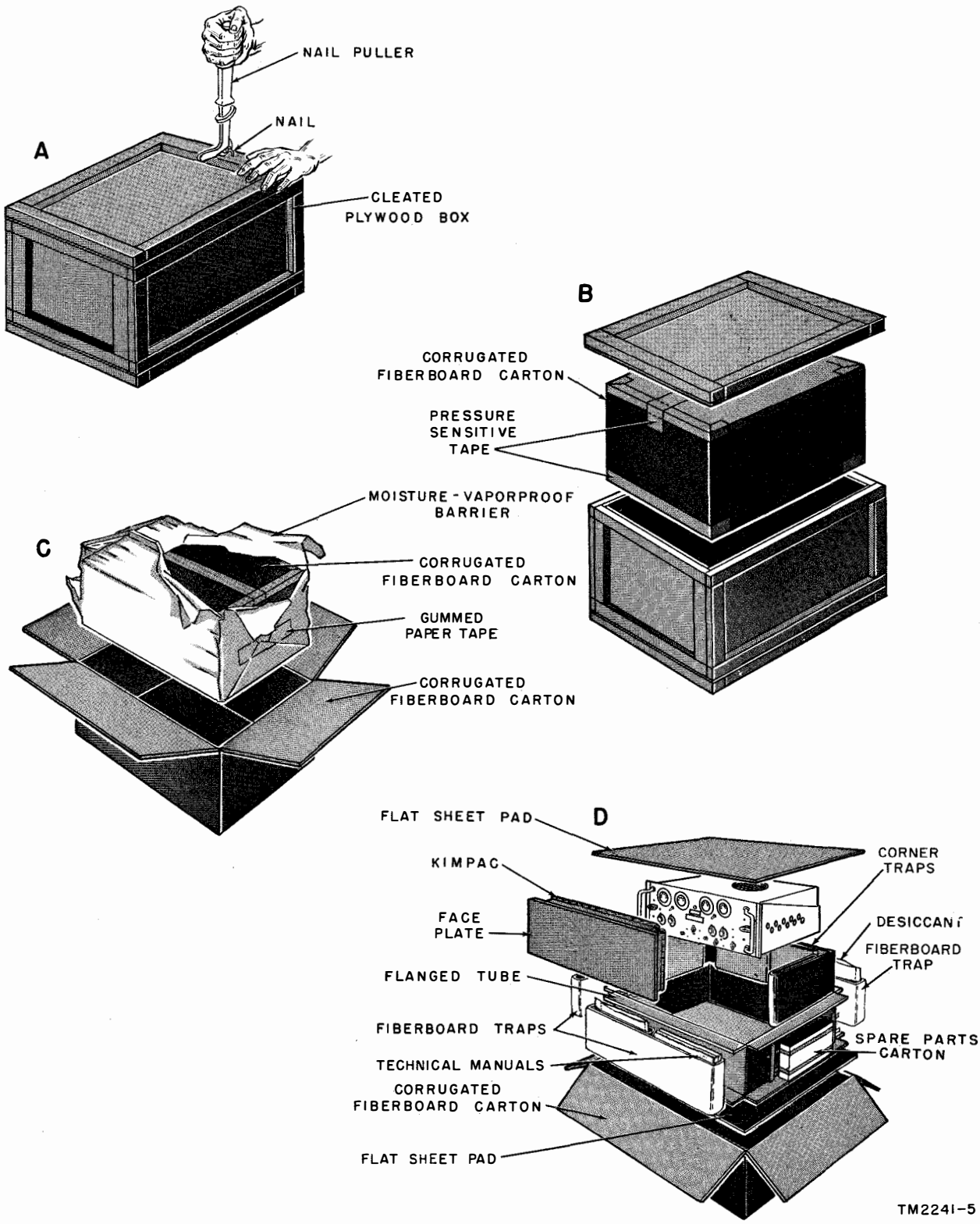

Figure 5. Frequency Shift Converter CV-116/URR, uncrating and unpacking.

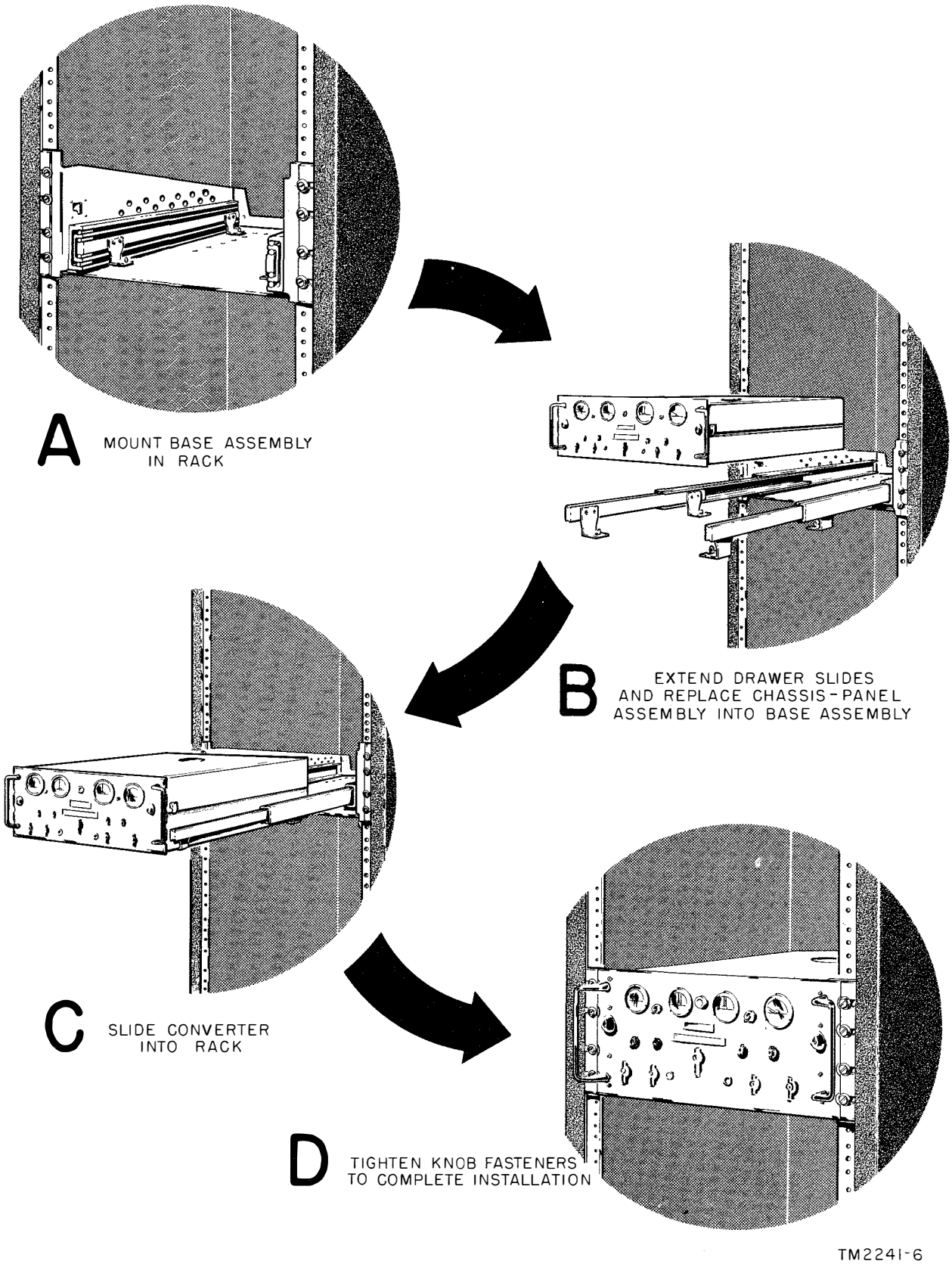

Figure 6. Rack mounting details.

b. Insert the plug at one end of Cord CG–409A/U into the INPUT A jack located at the rear of the converter and the plug at the other end of the cord into the coaxial if. output connector on the receiver, designated as receiver A.

c. If a second receiver is used for diversity operation, insert the plug at one end of a second Cord CG–409A/U into the INPUT B jack at the rear of the converter. Insert the plug at the other end of the cord into the coaxial if. output connector on the second receiver, designated as receiver B.

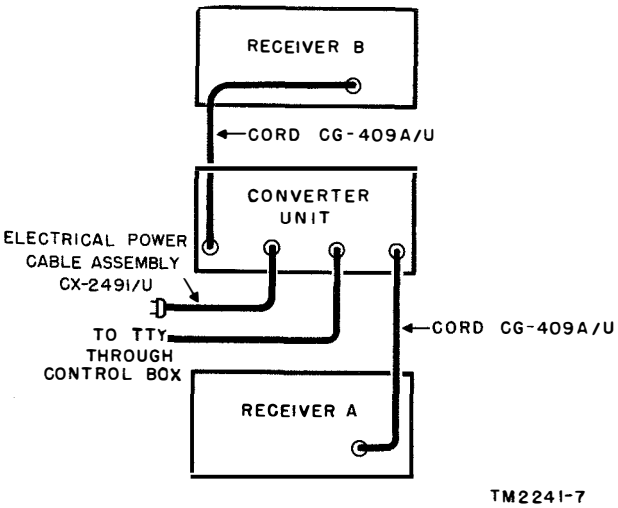

Figure 7. Dual-diversity operation, cording diagram.

d. The output connection (through a control box) to the tty selector magnet is made through pins A and D of the TT connector. (Refer to the technical manual of the teletypewriter for connections.) Provision has been made to place the converter MARK HOLD-XTAL-AFC switch in the MARK HOLD position from a remote position. This connection may be made by wiring a test key or lever switch between pin C of the TT connector and ground.

e. Insert the plug at one end of Electrical Power Cable Assembly CX–2491/U into the three-prong PWR. IN jack at the rear of the converter. Insert the two-prong plug at the other end of the power cord into the 115-volt ac power receptacle.

15. Service Upon Receipt of Used or Reconditioned Equipment

a. Follow the instructions given in paragraph 12 for uncrating, unpacking, and checking the equipment.

b. Check the used or reconditioned equipment for tags or other indications pertaining to changes in the wiring of the equipment. If changes in wiring have been made, note the changes in this manual, preferably on the schematic diagram.

c. Check the operating controls for ease of rotation. If lubrication is required, refer to the lubrication instructions in paragraphs 32 and 33.

d. Perform the installation and connection procedures given in paragraphs 13 and 14.

CHAPTER 3

OPERATION

Section I. CONTROLS AND INSTRUMENTS

16. General

Haphazard operation or improper setting of the controls can cause damage to electronic equipment. For this reason, it is important to know the function of every control. The actual operation of the equipment is discussed in paragraphs 18 and 19.

17. Controls and Instruments

(fig. 8)

The following chart lists the controls and instruments of the converter and indicates what they do.

Control or instrument	Function
POWER switch	In ON position, connects converter to ac power source.
AFC switch	In ON position, puts automatic frequency control into operation.
CHANNEL SELECTOR switch	Selects channel or channels to be fed to diversity circuits.
Channel A AFC SHIFT ADJUSTMENT	Adjusts balance of channel A afc dc amplifiers for signals of various frequency shifts.
Channel A AFC THRESHOLD	Determines the minimum level above which the channel A automatic frequency control circuit and keyer will operate.
Channel A AFC-XTAL-MARK HOLD switch	Selects method of frequency control for channel A oscillator and energizes the mark-hold circuit for test purposes. Using the right or left setting determines polarity of output mark-space signals.
Channel A DRIFT INDICATOR	Indicates amount of correction from original setting automatically applied to channel A oscillator circuit to compensate for signal drift when operating MARK HOLD-XTAL-AFC switch in AFC position and AFC switch in ON position. Clutch permits manual control and correction of channel A oscillator frequency when operating MARK HOLD-XTAL-AFC switch in AFC position.
Channel B AFC SHIFT ADJUSTMENT	Adjusts balance of channel B afc dc amplifiers for signals of various frequency shifts.
Channel B AFC THRESHOLD LEVEL	Determines the minimum level above which the channel B automatic frequency control circuit and keyer will operate.
Channel B AFC-XTAL-MARK HOLD switch	Selects method of frequency control for channel B oscillator and also to energize the mark-hold circuit for test purposes. Using the right or left setting determines polarity of output mark-space signals.
Channel B DRIFT INDICATOR	Indicates amount of correction from original setting automatically applied to channel B oscillator circuit to compensate for signal drift when operating MARK HOLD-XTAL-AFC switch in AFC position and AFC switch in ON position. Clutch permits manual control and correction of channel B oscillator frequency when operating MARK HOLD-XTAL-AFC switch in AFC position.
Channel A or B SIGNAL INPUT meter	Indicates the input level of the signal at the respective converter input terminals.
Channel B DISCRIMINATOR meter	Indicates channel B discriminator output.
Channel A DISCRIMINATOR meter	Normally indicates channel A discriminator output. May be used during alignment and final testing (ch. 5, Sec. III and IV) for metering various voltages throughout the converter.
AFC INDICATOR	Indicates by *spinner* disk whenever motor is operating to control oscillator frequency.
SPEED switch (fig. 9)	Selects correct filter circuit in discriminator section output for different keying speeds. HIGH: For keying speeds over 38 dot cycles per second. LOW: For keying speeds up to 38 dot cycles per second.

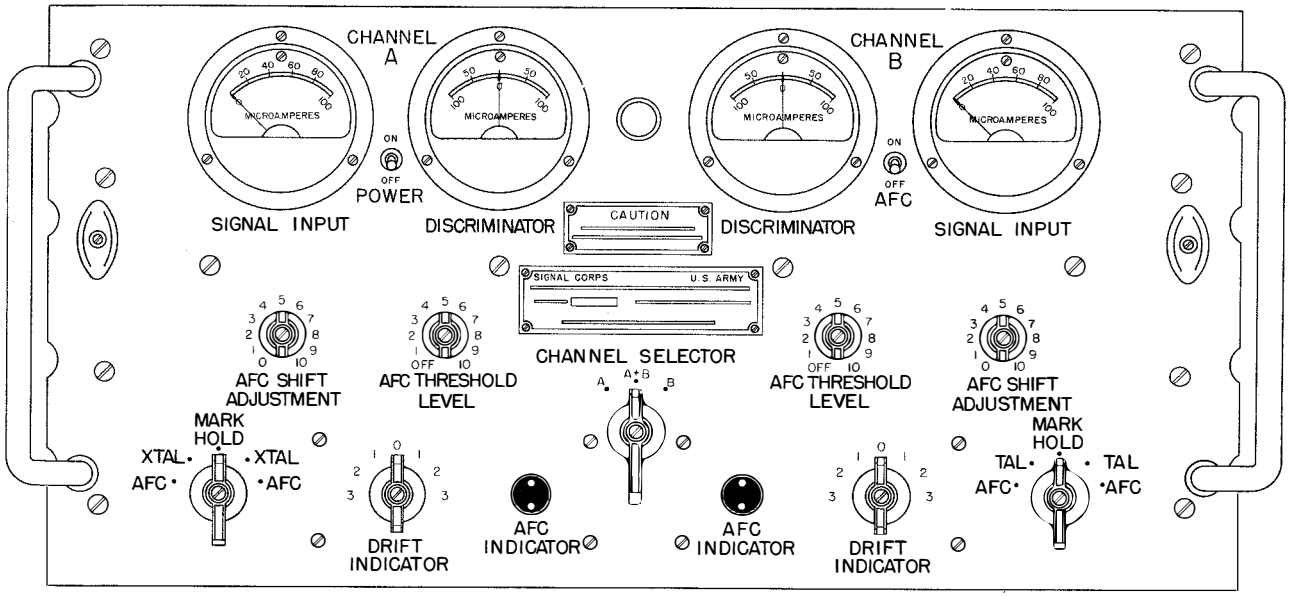

Figure 8. Frequency Shift Converter CV–116/URR, front panel.

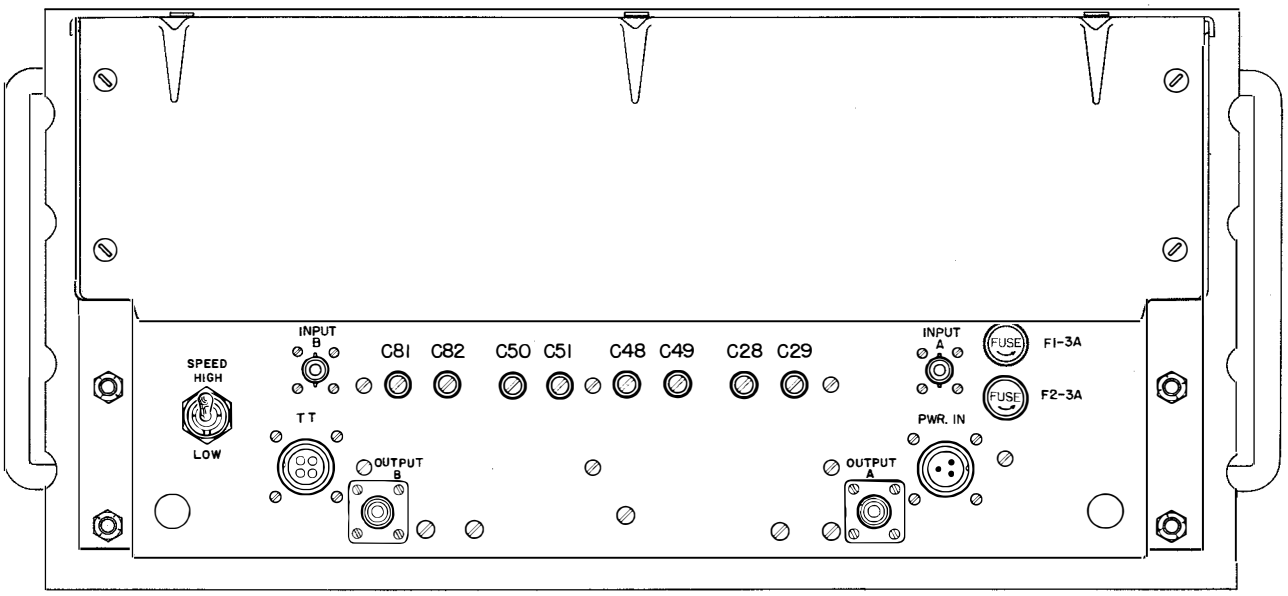

Figure 9. Frequency Shift Converter CV–116/URR, rear view.

Section II. PRESETTING AND INITIAL ADJUSTMENT

18. Presetting

The adjustment and operating instructions outlined in this and the following section apply to the equipment when it is used with radio receivers that have an if. output matching the present converter input frequency. In this case, no presetting of the converter should be necessary. Although the converter is preset for operation with a receiver having an if. frequency of 455 kc, it may be used with any receiver having an if. frequency in the range of 450–510 kc. A receiver having a different if. than that for which the converter has been preset cannot be used with the CV–116/URR until other crystals have been substituted for those installed in the converter and its if. input stages have been realined. The proper crystal frequencies for the converter may be determined from the following formulas:

for Channel A, $F=F_1-50$ kc
for Channel B, $F=F_1-29.3$ kc

where F=Crystal frequency in kc and F_1=Receiver if. frequency in kc. A complete rf alinement procedure is given in paragraph 61.

19. Initial Adjustment

a. General. In teletypewriter-printer loop circuits a marking current of 60 milliamperes (ma) is normally used. Potentiometer adjustment R109 (fig. 10) is provided to maintain this current flow for external loop resistance variations

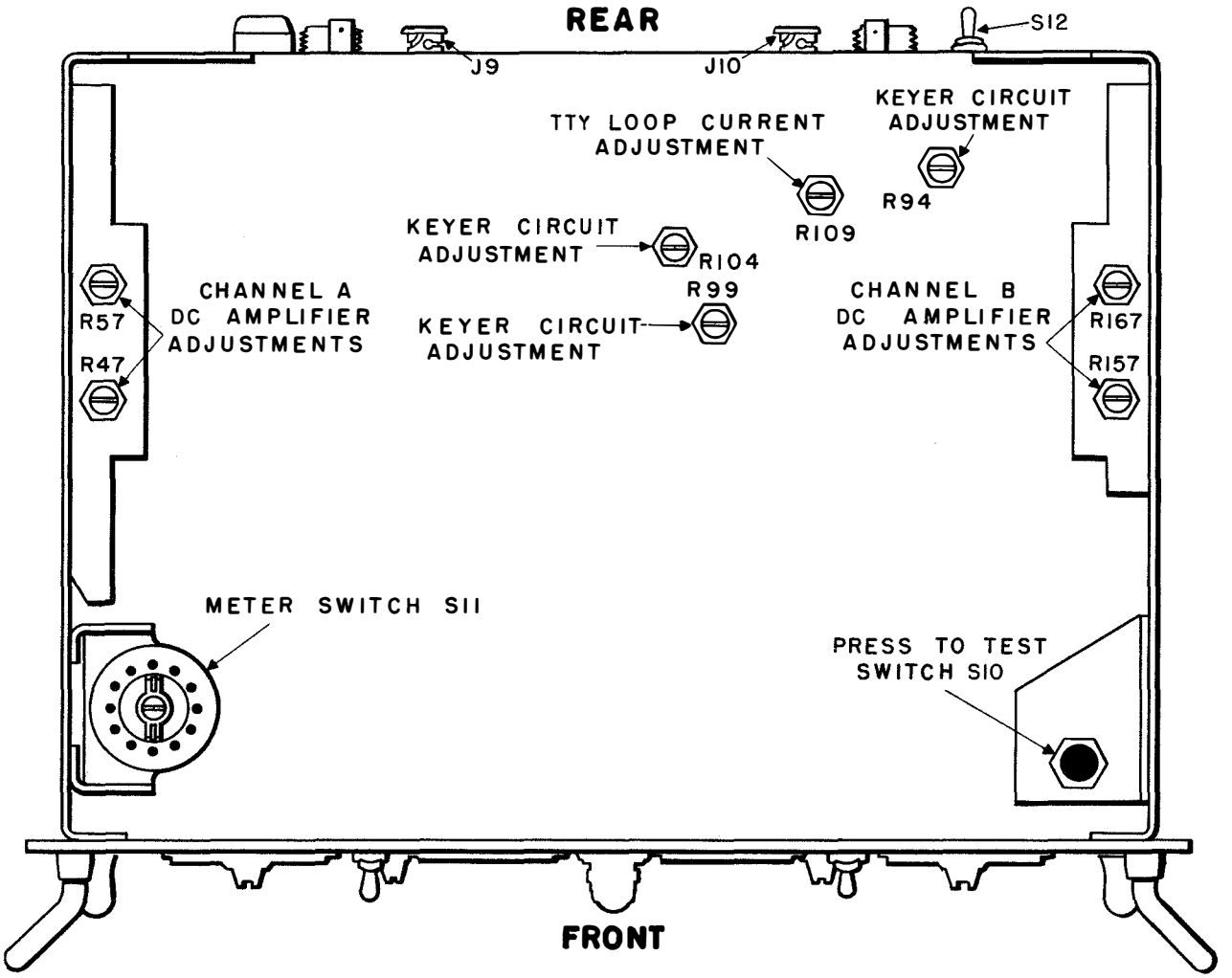

TM 2241-9

Figure 10. Converter unit top view, showing location of afc and keyer circuit adjustment controls and metering switches.

between 125 and 500 ohms. Once set for a given loop circuit, frequent adjustment of the output circuit should not be necessary. However, this initial adjustment is required whenever a different printer is used, whenever changes are made in the external loop circuit to compensate for tube or component aging, or whenever different ac power conditions exist.

b. Loop Current Adjustment. After checking to see that all required connections have been made as described in paragraph 14, throw the converter POWER switch to the ON position. The pilot lamp should light. Set the meter switch S11 (fig. 10) to position R109. Depress the PRESS TO TEST switch and adjust potentiometer R109 for a 60 microampere reading on the channel A DISCRIMINATOR meter. This reading multiplied by 1,000 is 60 ma, the required loop current.

Section III. OPERATION UNDER USUAL CONDITIONS

20. Preliminary Starting Procedure

Perform the preliminary starting procedure given below before using the starting procedure described in paragraph 21.

a. Be sure that a 115 volt, 50–60 cycle, power source is available and that the POWER switch is in the OFF position.

b. Be sure that the AFC switch is in the OFF position.

c. Turn both AFC SHIFT ADJUSTMENT controls to 0.

d. Turn both AFC THRESHOLD LEVEL controls to OFF.

e. Rotate the CHANNEL SELECTOR switch to A.

f. Rotate both AFC-XTAL-MARK HOLD switches to MARK HOLD position.

g. Turn both DRIFT INDICATOR controls to 0.

h. Set SPEED switch at the LOW position.

21. Starting Procedure

Note. If, during the starting procedure, an abnormal result is obtained see figure 40, troubleshooting chart.

See paragraph 20 before using this starting procedure.

a. Throw the POWER switch to ON and allow the converter to warm up.

b. Tune in a teletypewriter signal on receiver A by using a pair of earphones and the beat frequency oscillator (bfo) of the receiver to locate the station. Turn the receiver bfo off and leave it off for all subsequent operations.

c. Slowly retune radio receiver A while observing the channel A DISCRIMINATOR meter M4. Tune until the meter needle deflects to the right and to the left for miscellaneous keying signals. The deflections will be of approximately equal plus and minus values when the receiver is correctly tuned. The reading on meter M1, showing the SIGNAL INPUT level, should be at a maximum for the station being tuned in.

d. Rotate the channel A AFC-XTAL-MARK HOLD switch to the left-hand XTAL position. Turn the teletypewriter printer on and check the copy. If the printing has no meaning, rotate AFC-XTAL-MARK HOLD switch to the right-hand XTAL position. The teletypewriter should now print correct copy.

Note. Many teletypewriter stations transmit coded messages, in which case, correct operation can be determined by proper carriage return and line feed.

e. Rotate the CHANNEL SELECTOR switch to B.

f. Tune receiver B to the same teletypewriter signal using the bfo to set the signal by ear. Then turn the bfo off.

g. Slowly retune receiver B while observing the channel B DISCRIMINATOR meter M3. Tune until the miscellaneous deflections on meter M3 center around zero.

h. Rotate the channel B AFC–XTAL-MARK HOLD switch to the left-hand XTAL position. Check the copy on the teletypewriter printer. If the printing has no meaning, rotate the AFC-XTAL-MARK HOLD switch to the right-hand XTAL position.

i. With both receivers operating, rotate the CHANNEL SELECTOR switch to the A+B position. The converter is now set up for diversity operation.

22. Types of Operation

a. General. Whether using a diversity system or a single receiver input to the converter, three types of operation are possible. The type of operation used depends on the desired method for controlling the frequency of the converter oscillator. Three means of frequency control are available; the crystal controlled oscillator, the

variable frequency oscillator (vfo), and vfo with afc.

b. Crystal-Controlled Oscillator Operation. To place the converter in operation with crystal control, follow the steps outlined in paragraph 21. If either receiver A or B indicates a drift in frequency, retune the receiver carefully to obtain an average zero output on the DISCRIMINATOR meter.

c. Manually Tuned Vfo Operation. To operate the converter with manual control of the oscillator frequency, perform the steps outlined in paragraph 21 and proceed as follows:

(1) With both DRIFT INDICATOR controls set to zero, set the CHANNEL SELECTOR switch to position A and rotate the channel A AFC-XTAL-MARK HOLD switch to the right or left AFC position corresponding to the XTAL position required for correct copy (par. 21*d*).

(2) Carefully tune the channel A DRIFT INDICATOR control until the DISCRIMINATOR meter needle fluctuates about zero on miscellaneous keying signals.

(3) Adjust the channel A DRIFT INDICATOR control to correct for small frequency drifts that may occur in receiver A during operation.

(4) Rotate the CHANNEL SELECTOR switch to position B and the channel B AFC-XTAL-MARK HOLD switch to the right or left AFC-XTAL position as determined during the operation performed under paragraph 21*h*.

(5) Carefully tune the channel B DRIFT INDICATOR control until the channel B DISCRIMINATOR meter needle fluctuates about zero on miscellaneous keying signals.

(6) Adjust the channel B DRIFT INDICATOR control to correct for small frequency drifts that may occur in receiver B during operation.

(7) Rotate the CHANNEL SELECTOR switch to position A+B for diversity operation of the converter.

d. Afc Operation. To place the converter in operation with automatic frequency control, perform the steps outlined in paragraph 21. Move the AFC toggle switch to the ON position and proceed as follows:

(1) Rotate the CHANNEL SELECTOR switch to position A.

(2) Rotate the channel A AFC-XTAL-MARK HOLD switch to the right or left AFC position corresponding to the XTAL position required for correct copy (par. 21*d*), and immediately turn the channel A AFC SHIFT ADJUSTMENT until the AFC INDICATOR stops spinning. The teletypewriter should start printing.

(3) Adjust the channel A AFC THRESHOLD LEVEL control knob to the highest clockwise reading that does not allow weak signals to operate the teletypewriter. A practical way to find this setting is to advance the knob several divisions from the OFF position and check to see that the teletypewriter is printing correct copy. If the teletypewriter starts to print garbled copy, advance the knob further in the clockwise direction. The setting of the control is subject to change from time to time because of different transmission conditions. A steady marking condition results when the transmitting station shuts down or when the signal level drops below that set by the AFC THRESHOLD LEVEL.

(4) With the same teletypewriter signal tuned in on receiver B, rotate the CHANNEL SELECTOR switch to position B.

(5) Rotate the channel B AFC-XTAL-MARK HOLD switch to the right or left AFC position corresponding to the XTAL position required for correct copy (par. 21*h*), and immediately turn the channel B AFC SHIFT ADJUSTMENT until the AFC INDICATOR stops spinning. The teletypewriter should start printing.

(6) Adjust the channel B AFC THRESHOLD LEVEL control knob to the highest clockwise reading that does not allow weak signals to operate the teletypewriter ((3) above).

(7) Rotate the CHANNEL SELECTOR switch to the A+B position. The teletypewriter should now print correct copy indicating that the converter is ready for dual diversity operation.

23. Stopping Procedure

The stopping procedure is the same for all types of operation. Throw the POWER switch to the OFF position.

Section IV. OPERATION UNDER UNUSUAL CONDITIONS

24. General

The operation of Frequency Shift Converter CV-116/URR may be difficult in regions where extreme cold, heat, humidity and moisture, or sand conditions prevail. In the following paragraphs, instructions are given on procedures for minimizing the effects of these unusual operating conditions.

25. Operation in Arctic Climates

Subzero temperatures and climatic conditions associated with cold weather affect the efficient operation of the equipment. Instructions and precautions for operation under such adverse conditions follow.

a. Handle the equipment carefully.

b. Keep the equipment warm and dry.

c. When equipment that has been exposed to cold temperature is brought into a warm room, it will sweat until it reaches room temperature. This condition also may occur when the equipment warms up after a cold night. When the equipment reaches room temperature, dry it thoroughly.

26. Operation in Tropical Climates

When operated in tropical climates, radio equipment may be installed in tents, huts, or, when necessary, in underground dugouts. When equipment is installed below ground and when it is set up in swampy areas, moisture conditions are more acute than normal in the tropics. Ventilation is usually very poor, and the high relative humidity causes condensation of moisture on the equipment whenever the temperature of the equipment becomes lower than the surrounding air. To minimize this condition, provide adequate ventilation.

27. Operation in Desert Climates

a. Conditions similar to those encountered in tropical areas often prevail in desert areas. Use the same measures to insure proper operation of the equipment.

b. Never tie cords to either the inside or the outside of tents. Desert areas are subject to sudden wind squalls which may jerk the connections loose or break the lines.

c. Keep the equipment as free from dust as possible. Make frequent preventive maintenance checks (pars. 28 through 31).

CHAPTER 4

ORGANIZATIONAL MAINTENANCE

Section I. PREVENTIVE MAINTENANCE SERVICES

28. Definition of Preventive Maintenance

Preventive maintenance is work performed on equipment to keep it in good working order so that breakdowns and needless interruptions in service will be kept to a minimum. Preventive maintenance differs from troubleshooting and repair in that its object is to prevent certain troubles from occurring.

29. General Preventive Maintenance Techniques

a. Use No. 000 sandpaper to remove corrosion.

b. Use a clean, dry, lint-free cloth or a dry brush for cleaning.

(1) If necessary, except for electrical contacts, moisten the cloth or brush with Solvent, Dry Cleaning (SD); wipe the parts dry with a cloth.

(2) Clean electrical contacts with a cloth moistened with carbon tetrachloride; wipe dry with a dry cloth.

Caution: Repeated contact of carbon tetrachloride with the skin, or prolonged breathing of fumes, is dangerous. Make sure adequate ventilation is provided.

c. If available, dry compressed air may be used at a line pressure not exceeding 60 pounds per square inch to remove dust from inaccessible places; be careful, however, or mechanical damage from the air blast may result.

Note. The initial airblast should be directed away from the equipment to prevent possible damage from any foreign matter which may have been in the air line.

d. For further information on preventive maintenance techniques, refer to TB SIG 178.

30. Use of Preventive Maintenance Forms (figs. 11 and 12)

a. The information in this paragraph is presented as a guide to the individual making an inspection of equipment in accordance with instructions on DA Forms 11–238 and 11–239. The decision as to which items on the forms are applicable to this equipment is a technical decision to be made in the case of first echelon maintenance, by the communication officer/chief or his designated representative, and in the case of second and third echelon maintenance, by the individual making the inspection. Instructions for the use of each form appear on the reverse side of the form.

b. Circled items on figures 11 and 12 are either partially or totally applicable to Frequency Shift Converter CV–116/URR. Paragraph numbers in the ITEM column refer to preventive maintenance information in this manual.

31. Performing Preventive Maintenance

a. Performing Exterior Preventive Maintenance.

Caution: Tighten screws, nuts, and bolts carefully. Fittings tightened beyond the pressure for which they are designed will be damaged or broken.

(1) Check for completeness and satisfactory condition of the converter unit (par. 7).

(2) Check suitability of location and installation for normal operation (pars. 11 and 13).

(3) Remove dirt and moisture from cords, jacks, plugs, and panels of the converter.

(4) Inspect the seating of the fuses (fig. 9) and all plugs and connectors.

(5) Inspect all controls for binding, scraping, excessive looseness, worn shafts, misalinement, and positive action (figs. 8, 9, and 10).

(6) Check for normal operation (pars. 18 through 23).

(7) Clean and tighten the panel mountings (fig. 6).

OPERATOR FIRST ECHELON MAINTENANCE CHECK LIST FOR SIGNAL CORPS EQUIPMENT

RADIO COMMUNICATION, DIRECTION FINDING, CARRIER, RADAR

INSTRUCTIONS: *See other side*

EQUIPMENT NOMENCLATURE	EQUIPMENT SERIAL NO.

LEGEND FOR MARKING CONDITIONS: ✓ Satisfactory; X Adjustment, repair or replacement required; (X) Defect corrected.
NOTE: Strike out items not applicable.

DAILY

NO.	ITEM	CONDITION S	M	T	W	T	F	S
1	COMPLETENESS AND GENERAL CONDITION OF EQUIPMENT *(receiver, transmitter, carrying cases, wire and cable, microphones, tubes, spare parts, technical manuals and accessories).* PAR. 31 a (1)							
2	LOCATION AND INSTALLATION SUITABLE FOR NORMAL OPERATION. PAR. 31 a (2)							
3	CLEAN DIRT AND MOISTURE FROM ANTENNA, MICROPHONE, HEADSETS, CHESTSETS, KEYS, JACKS, PLUGS, TELEPHONES, CARRYING BAGS, COMPONENT PANELS. PAR. 31 a (3)							
4	INSPECT SEATING OF READILY ACCESSIBLE "PLUCK-OUT" ITEMS: TUBES, LAMPS, CRYSTALS, FUSES, CONNECTORS, VIBRATORS, PLUG-IN COILS AND RESISTORS. PAR. 31 a (4)							
5	INSPECT CONTROLS FOR BINDING, SCRAPING, EXCESSIVE LOOSENESS, WORN OR CHIPPED GEARS, MISALIGNMENT, POSITIVE ACTION. PAR. 31 a (5)							
6	CHECK FOR NORMAL OPERATION. PAR. 31 a (6)							

WEEKLY

NO.	ITEM	CONDITION	NO.	ITEM	CONDITION
7	CLEAN AND TIGHTEN EXTERIOR OF COMPONENTS AND CASES, RACK MOUNTS, SHOCK MOUNTS, ANTENNA MOUNTS, COAXIAL TRANSMISSION LINES, WAVE GUIDES, AND CABLE CONNECTIONS. PAR. 31 a (7)		13	INSPECT STORAGE BATTERIES FOR DIRT, LOOSE TERMINALS, ELECTROLYTE LEVEL AND SPECIFIC GRAVITY, AND DAMAGED CASES.	
8	INSPECT CASES, MOUNTINGS, ANTENNAS, TOWERS, AND EXPOSED METAL SURFACES, FOR RUST, CORROSION, AND MOISTURE. PAR. 31 a (8)		14	CLEAN AIR FILTERS, BRASS NAME PLATES, DIAL AND METER WINDOWS, JEWEL ASSEMBLIES. PAR. 31 a (12)	
9	INSPECT CORD, CABLE, WIRE, AND SHOCK MOUNTS FOR CUTS, BREAKS, FRAYING, DETERIORATION, KINKS, AND STRAIN. PAR. 31 a (9)		15	INSPECT METERS FOR DAMAGED GLASS AND CASES. PAR. 31 a (13)	
10	INSPECT ANTENNA FOR ECCENTRICITIES, CORROSION, LOOSE FIT, DAMAGED INSULATORS AND REFLECTORS.		16	INSPECT SHELTERS AND COVERS FOR ADEQUACY OF WEATHER-PROOFING.	
11	INSPECT CANVAS ITEMS, LEATHER, AND CABLING FOR MILDEW, TEARS, AND FRAYING. PAR. 31 a (10)		17	CHECK ANTENNA GUY WIRES FOR LOOSENESS AND PROPER TENSION.	
12	INSPECT FOR LOOSENESS OF ACCESSIBLE ITEMS: SWITCHES, KNOBS, JACKS, CONNECTORS, ELECTRICAL TRANSFORMERS, POWERSTATS, RELAYS, SELSYNS, MOTORS, BLOWERS, CAPACITORS, GENERATORS, AND PILOT LIGHT ASSEMBLIES. PAR. 31 a (11)		18	CHECK TERMINAL BOX COVERS FOR CRACKS, LEAKS, DAMAGED GASKETS, DIRT AND GREASE.	

19 IF DEFICIENCIES NOTED ARE NOT CORRECTED DURING INSPECTION, INDICATE ACTION TAKEN FOR CORRECTION. PAR. 31 a (15)

DA FORM 1 MAY 51 11-238 REPLACES DA AGO FORM 419, 1 DEC 50, WHICH IS OBSOLETE.

Figure 11. DA Form 11-238.

SECOND AND THIRD ECHELON MAINTENANCE CHECK LIST FOR SIGNAL CORPS EQUIPMENT

RADIO COMMUNICATION, DIRECTION FINDING, CARRIER, RADAR

INSTRUCTIONS: See other side

EQUIPMENT NOMENCLATURE	EQUIPMENT SERIAL NO.

LEGEND FOR MARKING CONDITIONS: ✓ Satisfactory; X Adjustment, repair or replacement required; (X) Defect corrected.
NOTE: Strike out items not applicable.

NO	ITEM	CONDITION	NO.	ITEM	CONDITION
1	COMPLETENESS AND GENERAL CONDITION OF EQUIPMENT *(receiver, transmitter, carrying cases, wire and cable, microphones, tubes, spare parts, technical manuals and accessories).* PAR. 31a (1)		19	ELECTRON TUBES - INSPECT FOR LOOSE ENVELOPES, CAP CONNECTORS, CRACKED SOCKETS: INSUFFICIENT SOCKET SPRING TENSION; CLEAN DUST AND DIRT CAREFULLY; CHECK EMISSION OF RECEIVER TYPE TUBES. PAR. 31b (1)	
2	LOCATION AND INSTALLATION SUITABLE FOR NORMAL OPERATION. PAR. 31a (2)		20	INSPECT FILM CUT-OUTS FOR LOOSE PARTS, DIRT, MISALIGNMENT AND CORROSION.	
3	CLEAN DIRT AND MOISTURE FROM ANTENNA, MICROPHONE, HEADSETS, CHESTSETS, KEYS, JACKS, PLUGS, TELEPHONES, CARRYING BAGS, COMPONENT PANELS. PAR. 31a (3)		21	INSPECT FIXED CAPACITORS FOR LEAKS, BULGES, AND DISCOLORATION. PAR. 31b (2)	
4	INSPECT SEATING OF READILY ACCESSIBLE "PLUCK-OUT" ITEMS: TUBES, LAMPS, CRYSTALS, FUSES, CONNECTORS, VIBRATORS, PLUG-IN COILS AND RESISTORS. PAR. 31a (4)		22	INSPECT RELAY AND CIRCUIT BREAKER ASSEMBLIES FOR LOOSE MOUNTINGS; BURNED, PITTED, CORRODED CONTACTS; MISALIGNMENT OF CONTACTS AND SPRINGS; INSUFFICIENT SPRING TENSION; BINDING OF PLUNGERS AND HINGE PARTS. PAR. 31b (3)	
5	INSPECT CONTROLS FOR BINDING, SCRAPING, EXCESSIVE LOOSENESS, WORN OR CHIPPED GEARS, MISALIGNMENT, POSITIVE ACTION. PAR. 31a (5)		23	INSPECT VARIABLE CAPACITORS FOR DIRT, MOISTURE, MISALIGNMENT OF PLATES, AND LOOSE MOUNTINGS. PAR. 31b (4)	
6	CHECK FOR NORMAL OPERATION. PAR. 31a (6)		24	INSPECT RESISTORS, BUSHINGS, AND INSULATORS, FOR CRACKS, CHIPPING, BLISTERING, DISCOLORATION AND MOISTURE. PAR. 31b (5)	
7	CLEAN AND TIGHTEN EXTERIOR OF COMPONENTS AND CASES, RACK MOUNTS, SHOCK MOUNTS, ANTENNA MOUNTS, COAXIAL TRANSMISSION LINES, WAVE GUIDES, AND CABLE CONNECTIONS. PAR. 31a (7)		25	INSPECT TERMINALS OF LARGE FIXED CAPACITORS AND RESISTORS FOR CORROSION, DIRT AND LOOSE CONTACTS. PAR. 31b (6)	
8	INSPECT CASES, MOUNTINGS, ANTENNAS, TOWERS, AND EXPOSED METAL SURFACES, FOR RUST, CORROSION, AND MOISTURE. PAR. 31a (8)		26	CLEAN AND TIGHTEN SWITCHES, TERMINAL BLOCKS, BLOWERS, RELAY CASES, AND INTERIORS OF CHASSIS AND CABINETS NOT READILY ACCESSIBLE. PAR. 31b (7)	
9	INSPECT CORD, CABLE, WIRE, AND SHOCK MOUNTS FOR CUTS, BREAKS, FRAYING, DETERIORATION, KINKS, AND STRAIN. PAR. 31a (9)		27	INSPECT TERMINAL BLOCKS FOR LOOSE CONNECTIONS, CRACKS AND BREAKS. PAR. 31b (8)	
10	INSPECT ANTENNA FOR ECCENTRICITIES, CORROSION, LOOSE FIT, DAMAGED INSULATORS AND REFLECTORS.		28	CHECK SETTINGS OF ADJUSTABLE RELAYS. PAR. 31b (9)	
11	INSPECT CANVAS ITEMS, LEATHER, AND CABLING FOR MILDEW, TEARS, AND FRAYING. PAR. 31a (10)		29	LUBRICATE EQUIPMENT IN ACCORDANCE WITH APPLICABLE DEPARTMENT OF THE ARMY LUBRICATION ORDER. PAR. 31b (10)	
12	INSPECT FOR LOOSENESS OF ACCESSIBLE ITEMS: SWITCHES, KNOBS, JACKS, CONNECTORS, ELECTRICAL TRANSFORMERS, POWERSTATS, RELAYS, SELSYNS, MOTORS, BLOWERS, CAPACITORS, GENERATORS, AND PILOT LIGHT ASSEMBLIES. PAR. 31a (11)		30	INSPECT GENERATORS, AMPLIDYNES, DYNAMOTORS, FOR BRUSH WEAR, SPRING TENSION, ARCING, AND FITTING OF COMMUTATOR.	
13	INSPECT STORAGE BATTERIES FOR DIRT, LOOSE TERMINALS, ELECTROLYTE LEVEL AND SPECIFIC GRAVITY, AND DAMAGED CASES.		31	CLEAN AND TIGHTEN CONNECTIONS AND MOUNTINGS FOR TRANSFORMERS, CHOKES, POTENTIOMETERS, AND RHEOSTATS. PAR. 31b (11)	
14	CLEAN AIR FILTERS, BRASS NAME PLATES, DIAL AND METER WINDOWS, JEWEL ASSEMBLIES. PAR. 31a (12)		32	INSPECT TRANSFORMERS, CHOKES, POTENTIOMETERS, AND RHEOSTATS FOR OVERHEATING AND OIL-LEAKAGE. PAR. 31b (12)	
15	INSPECT METERS FOR DAMAGED GLASS AND CASES. PAR. 31a (13)		33	BEFORE SHIPPING OR STORING - REMOVE BATTERIES.	
16	INSPECT SHELTERS AND COVERS FOR ADEQUACY OF WEATHERPROOFING.		34	INSPECT CATHODE RAY TUBES FOR BURNT SCREEN SPOTS.	
17	CHECK ANTENNA GUY WIRES FOR LOOSENESS AND PROPER TENSION.		35	INSPECT BATTERIES FOR SHORTS AND DEAD CELLS.	
18	CHECK TERMINAL BOX COVERS FOR CRACKS, LEAKS, DAMAGED GASKETS, DIRT AND GREASE.		36	INSPECT FOR LEAKING WATERPROOF GASKETS, WORN OR LOOSE PARTS. PAR. 31b (13)	
			37	MOISTURE AND FUNGIPROOF. PAR. 31b (14)	
38	IF DEFICIENCIES NOTED ARE NOT CORRECTED DURING INSPECTION, INDICATE ACTION TAKEN FOR CORRECTION. PAR. 31b (15)				

DA FORM 1 MAY 51 11-239 REPLACES DAAGO FORM 419, 1 DEC 50, WHICH IS OBSOLETE. 60—10—64382-1

TM2241-11

Figure 12. DA Form 11-239.

(8) Inspect case, mounting, and exposed metal surfaces for rust, corrosion, and moisture.

(9) Inspect cord and cable for cuts, breaks, fraying, deterioration kinks, and strain (fig. 7).

(10) Inspect cabling for tears, mildew, or fraying (fig. 7).

(11) Inspect for looseness of accessible items: switches, knobs, jacks, connectors, transformers, relays, motors, blower, capacitors, and pilot light assemblies.

(12) Clean the meter and indicator windows and jewel assembly.

(13) Inspect meters for damaged glass and cases.

b. Performing Interior Preventive Maintenance.

Caution: Disconnect all power before performing the following operations. Upon completion, reconnect the power and check for satisfactory operation.

(1) Do not work on tubes immediately after shutdown. Severe burns may result from contact with hot envelopes. Inspect glass envelopes for cracks and accumulation of dirt (see fig. 45 for tube location). Inspect firmness of tubes in their sockets. Press them firmly, but gently, straight down in their sockets. Do not jiggle the tubes from side to side as this may break the pins or spread the contacts of the socket. Inspect tube sockets at times when removal of the tubes is required. Check emission of tubes.

(2) Inspect terminals of the large fixed capacitors for corrosion and loose connections. Carefully inspect mountings to discover loose mounting screws, studs, or brackets. Examine leads for poor insulation, cracks, and evidences of dry rot. Cut away frayed strands on insulation. If wire is exposed, wrap it with friction tape. See that the terminals of capacitors are not cracked or broken. Thoroughly inspect the case of each large fixed capacitor for leaks, bulges, and discoloration. Clean the case of fixed capacitors, the insulating bushings, and all connections that are dirty or corroded. Capacitor cases and bushings usually can be cleaned with a dry cloth, however, if the deposit of dirt is hard to remove, moisten the cloth in solvent (SD).

(3) The relay is considered normal if the exterior is free from dirt or dust, the contacts are not burned, pitted, or corroded, the contacts are lined up and spaced correctly, the moving parts travel freely and function properly, the connections to the relay are tight, the wire insulation is not frayed or torn, the relay assembly is securely mounted, and the field coil shows no signs of overheating. Examine the contacts of the relay (par. 59) with the aid of a flashlight. Tighten all loose connections and mounting screws, but do not apply enough force to damage the screws or break the parts they hold. Brush the exterior with a soft brush. If it is very dirty, clean it with a brush dipped in solvent (SD). If loose connections are found, they should be corrected. If dirty or corroded, remove, clean, and replace them carefully.

(4) Inspect variable capacitor C8 (fig. 48) for dirt, moisture, misalinement of plates, and loose mountings.

(5) Inspect all resistors (figs. 43 and 46) for blistering, discoloration, and other signs of overheating. Inspect the coating of the cement-coated resistors for signs of cracks and chipping. Inspect all leads, but be careful not to move resistors with delicate pigtail leads or these leads may break at the point where they enter the resistor body. Resistors that have become discolored indicate that they have been overheated and that there may be circuit trouble which requires analysis and correction.

Note. When fungiproofed resistors are heated, a harmless brown stain may appear.

(6) Inspect terminals of large fixed capacitors and resistors for corrosion, dirt, and loose contacts ((2) above).

(7) Inspect the mechanical action of each switch. Look for signs of dirt and corrosion of all exposed elements of the switch (fig. 46). Examine the ganged switches to see that their shafts are lubricated properly (fig. 13) and that the electrical contacts are clean. The inspection is visual. Do not pry the leaves of the

switch apart. The rotating members should make good contact with the stationary members, and as the former slides into the latter, a spreading of the stationary contact levels should be noticed. Clean the exterior surfaces of switches with a stiff brush moistened with solvent (SD).

(8) Inspect terminal blocks for loose connections, cracks, and breaks.

(9) Check the settings of relays K1 and K2 (par. 59).

(10) Lubricate the equipment as described in paragraphs 32 and 33.

(11) Clean and tighten connections and mountings for transformers, motors, potentiometers, and rheostats.

(12) Inspect transformers, motors, potentiometers, and rheostats for overheating.

(13) Check the front panel and case to be certain that a waterproof bond is maintained.

(14) Check the adequacy of moistureproof and fungiproof treatment (pars. 34 and 35).

(15) If deficiencies noted are not corrected during inspection, indicate action needed for correction.

Section II. LUBRICATION

32. Lubrication

The lubrication of the converter is relatively simple. The points needing lubrication and the frequency with which they should be lubricated under normal operating conditions are shown in figure 13.

a. Switches. The switch shafts are accessible from the bottom or the top of the equipment. No disassembly is necessary for their lubrication. Clean the shafts and areas adjacent to the switch shaft bearings. Apply a small amount of oil, lubricating, preservative, special (PL) to the bearings. Wipe off excess. The detent ball bearings of the rotary switches should be given a light coating of grease at monthly intervals.

b. Converter Case. The guide rails inside the case and the contacting surfaces of the fasteners should be given a light coating of grease at monthly intervals.

c. Afc Unit Gears. The contacting gear surfaces, as well as the gear shafts, in the gear case of the afc unit, should be coated with grease at yearly intervals. See figure 48 and paragraph 58*b* for the method of disassembling the afc unit for lubrication.

d. Blower Motor. Lubricate the two ball bearings of the blower motor annually. The blower motor may be dissassembled for access to the ball bearings by removing the four screws that hold the end balls together. Use a few drops of Oil, Lubricating, Aircraft Instrument (Low Volatility) (MIL-L-6085). The oil may be introduced into the ball bearing race by using an awl as a dropper.

33. Lubrication Under Unusual Conditions

The effects of extreme cold and heat on lubrication materials and lubricants are explained in TB SIG 69. Observe all precautions outlined in TB SIG 69 and pay strict attention to all lubrication instructions when operating equipment under conditions of extreme cold or heat.

Section III. WEATHERPROOFING

34. Weatherproofing

a. General. Signal Corps equipment, when operated under severe climatic conditions such as those prevailing in tropical, Arctic, and desert regions, requires special treatment and maintenance. Fungus growth, insects, dust, corrosion, salt spray, excessive moisture, and extreme temperatures are harmful to most materials.

b. Tropical Maintenance. A special moistureproofing and fungiproofing treatment has been devised which, if properly applied, provides a reasonable degree of protection. This treatment is fully explained in TB SIG 13 and TB SIG 72.

c. Arctic Maintenance. Special precautions necessary to prevent equipment failure in areas subject to extremely low temperatures are fully explained in TB SIG 66 and TB SIG 219.

d. Desert Maintenance. Special precautions necessary to prevent equipment failure in areas subject to extremely high temperatures, low humidity, and excessive sand and dust are fully explained in TB SIG 75.

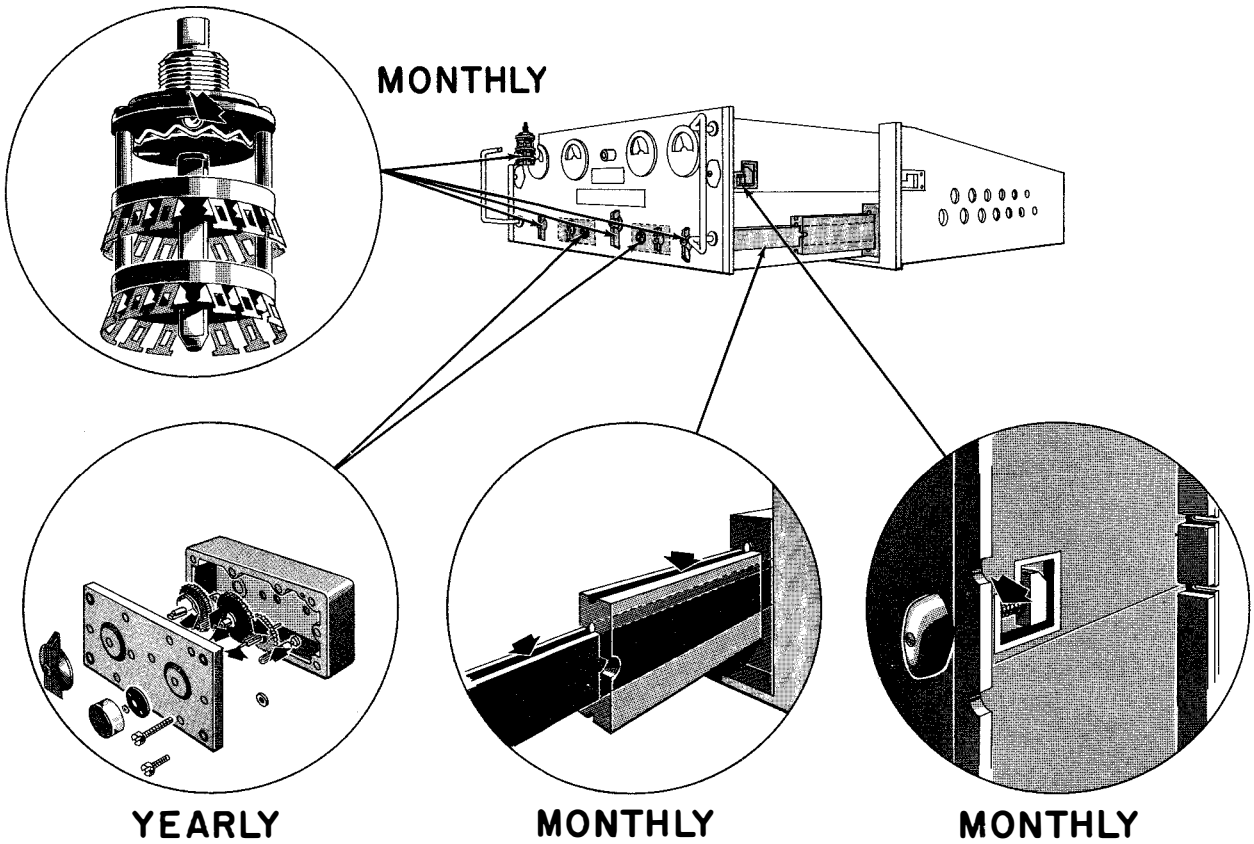

TM2241-58

Figure 13. Frequency Shift Converter CV-116/URR, lubrication points.

35. Rustproofing and Painting

a. When the finish on the case has been badly scarred or damaged, rust and corrosion can be prevented by touching up bared surfaces. Use No. 00 or No. 000 sandpaper to clean the surface down to the bare metal; obtain a bright smooth finish.

Caution: Do not use steel wool. Minute particles frequently enter the case and cause harmful internal shorting or grounding of circuits.

b. When a touchup job is necessary, apply paint with a small brush. Remove rust from the case by cleaning corroded metal with solvent (SD). In severe cases, it may be necessary to use solvent (SD) to soften the rust and to use sandpaper to complete the preparation for painting. Paint used will be authorized and consistent with existing regulations.

CHAPTER 5

THEORY

36. Block Diagram

(fig. 14)

a. General.

(1) The frequency-shift method of communication is a system of automatic code transmission and reception that shifts the carrier frequency up and down between two distinct frequencies to designate, respectively, the mark and space portions of the code characters. It provides noise reduction and other advantages of frequency modulation for telegraph and teletypewriter signals. The frequency separation employed between mark and space signals with this equipment may be as little as 150 cps and as much as 1,000 cps.

(2) Frequency Shift Converter CV–116/URR is designed for use with two radio receivers operating in a dual-diversity system. In space diversity, the two receivers are tuned to the same frequency but the receiving antennas are spaced several wave lengths apart. In frequency-diversity reception, the two receivers are tuned to separate frequency-shift carriers which are simultaneously carrying the same mark-space characters. With this type of reception, the frequency separation between carriers is limited only by the range of the associated receivers and transmitters. The advantage of space-diversity operation results from the fact that a single rf carrier generally does not fade simultaneously at spots that are more than one wave length apart. The advantage of frequency diversity is that fading of carriers of different frequencies generally does not occur at the same time.

(3) The if. output of one receiver is connected to INPUT A of Frequency Shift Converter CV–116/URR and the if. output of the other receiver is connected to INPUT B. Each input circuit amplifies the signal and converts it to a lower if. The two frequency-shift signals, now operating at lower if. frequencies, are fed to the diversity circuits where they are amplified, limited, and combined. The resultant frequency shift signal is then converted into dc pulses which ultimately control a tty unit. In this manner, optimum signals are obtained from diversity reception. Figure 14 shows the path followed by the signals in Frequency Shift Converter CV–116/URR. A complete schematic diagram is shown in figure 62.

(4) The tty output circuit of the converter produces a *current on* and *current off* square wave signal of one polarity. This is known as the *neutral system* as opposed to the *polar system* which produces square wave current pulses of opposite polarities. Figure 15 contrasts the ideal neutral wave form and the practical neutral wave form as it is achieved in the output of the converter. In the neutral output of the converter, a marking current of 60 ma normally is used to operate the selector magnet of the teletypewriter printer. Absence of current is used as a space signal. In the polar system, the positive pulse would be used to mark, the negative pulse to space.

(5) The afc circuits correct for the effects of frequency drifts in the if. signals fed to the converter inputs. A motor-driven capacitor in the oscillator tuning circuit accomplishes this when actuated by an *off-frequency* voltage developed across the discriminator output.

b. Input Circuits. The input circuits for each channel consist of an rf amplifier V1 or V27, an oscillator V2 or V28, and a mixer stage V3 or V29 which amplify the if. output of the associated receiver and convert it to a lower if. The output of each input circuit is fed to the diversity limiter circuits and to the afc first limiting amplifier.

c. Diversity Limiting Amplifiers. Limiting stages V16, V17, V18, V19, and V20 are designed to apply a constant voltage to the input circuit of the diversity discriminators. Limiter diode V19 provides a clipping action which prevents voltage peaks from exceeding a predetermined value. Tube noises, circuit noises, and static appear as amplitude variations of the signal, therefore, the full potentialities of frequency modulation in reducing interference can be realized.

d. Diversity Discriminators. The individual discriminator circuits in conjunction with V21 and V22 (fig. 22) are identical, except for the operating frequency. Because they are tuned to different frequencies, one resonates only to channel A signals, and the other resonates only to channel B signals. Primarily, each discriminator functions to change frequency shifts about the carrier to dc voltages which correspond to the original mark-space pulses. The output networks of the two discriminators are in series, therefore, the voltages add and are fed to the keyer circuit.

e. Keyer Circuit. The keyer circuit consists of cathode follower V23A, keyer amplifier V24A, space-keyer V24B and mark-keyer stage V25 and V26. The keyer section opens or closes the loop supply and applies dc pulses across the two pins connected to the tty selector magnet.

f. Afc Limiting Amplifiers. The limiting amplifier section, consisting of V4, V5, V6, and V7 in channel A, amplifies part of the signal appearing across the output circuit of the mixer stage and feeds it to the discriminator diode (V8) as a constant amplitude alternating voltage. This voltage, after demodulation at the discriminator, is used to actuate the afc system which corrects for any frequency drift of the carrier or local oscillator. The afc limiting amplifier consisting of V30, V31, V32, and V33 serves the same function in channel B.

g. Afc Discriminator. Referring to channel A, discriminator diode V8, by rectification, produces a dc voltage at the grid of each section of V9 for any signal frequency appearing at the secondary of the discriminator transformer. The dc voltage is directly proportional to any frequency deviation from the correct center if. frequency of 50 kc up to ±1 kc, after which the output voltage drops off rapidly. A similar demodulation takes place in channel B discriminator, which responds to frequencies centering around 29.3 kc.

h. Sampler and Shift Reference Circuits. Referring to channel A, sampler V9 samples the voltage across the discriminator load and permits only long, general, frequency drifts to actuate the afc system. Otherwise the afc system would go into operation with every frequency shift caused by normal mark-space keying. The shift reference stage, tube V10A, permits adjustment for different discriminator voltage outputs so that the dc amplifier circuit can be balanced for various frequency shifts employed by the incoming signal. When properly adjusted for an incoming signal of a given frequency shift, only a drift in mark frequency will cause an unbalanced condition in the dc amplifiers. In channel B, sampler V35 and shift reference tube V36A serve similar functions.

i. Dc Amplifier Stages. The dc amplifier consists of two dc amplifier circuits and an inverter stage. Normally, with no *error* signal from the discriminator, the dc amplifier is in a balanced condition and a negative voltage is applied to the grids of the motor drive tube. Any if. frequency drift will disturb the dc amplifier balance and cause a voltage to be amplified and fed to the motor drive circuit.

j. Motor and Afc Motor Drive Circuit. Tubes V15 and V40 are the motor drive stages for their respective channel sections. Tube V15, associated with the motor drive stage of channel A, controls a small two-phase ac motor mechanically coupled to turn the tuning capacitor of oscillator V2. Any error signal due to a frequency drift is amplified and used to actuate the motor, which drives the tuning capacitor to correct the oscillator frequency. As soon as the frequency is corrected, balance is restored to the dc amplifiers and the input to the motor drive stage is again zero. In a similar manner, V40 drives another motor which is coupled to the tuning capacitor of channel B oscillator V28 to correct for any frequency drift.

k. Threshold Control Circuit. The threshold control circuit, consisting of a signal rectifier and a threshold amplifier, operates a relay. On weak signals, this action causes one set of relay contacts to open the afc tuning-capacitor motor circuit and

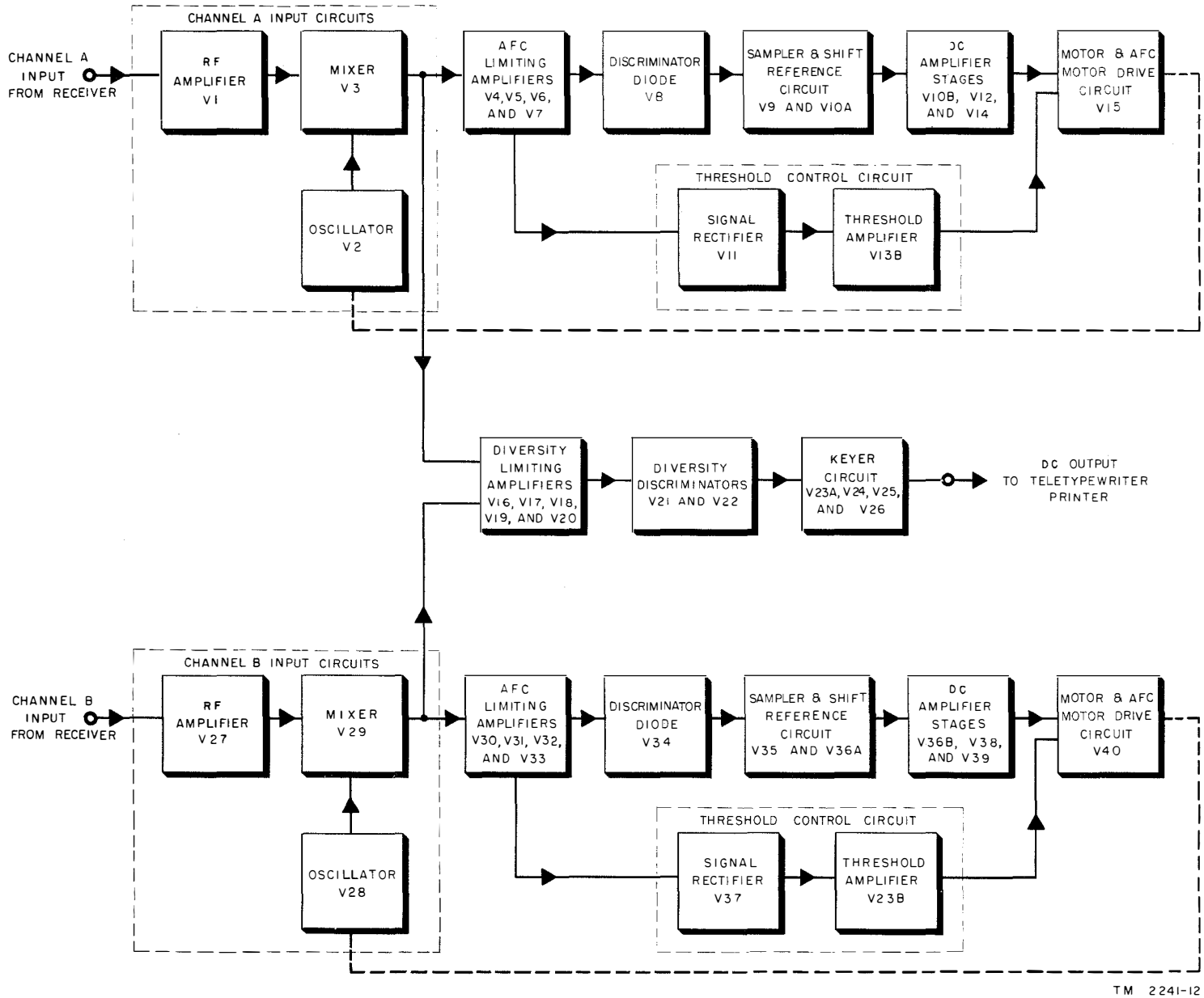

Figure 14. Converter unit, block diagram.

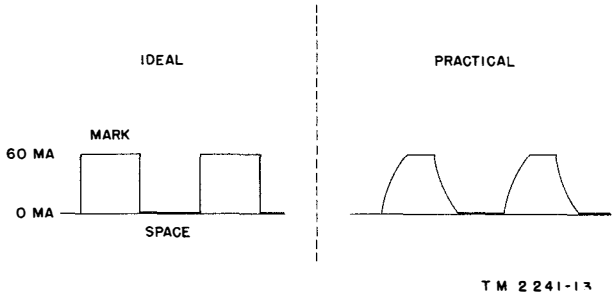

Figure 15. Neutral wave shapes.

the other set of contacts to ground the keyer amplifier so that a 60 ma mark-hold signal is fed to the teletypewriter printer.

37. Rf Amplifier

(figs. 16 and 62)

a. The first stage of each channel input circuit is an rf amplifier, V1 for channel A and V27 for channel B. The signal voltage from the channel A receiver is connected to input connector J1, and the signal voltage from the channel B receiver is connected to input connector J5. The signals applied to the input jacks are inductively coupled to the grids of V1 and V27 by transformers T1 and T3. In channel A, capacitor C1 combined with an adjustable iron core inserted in the secondary coil of T1 tunes the grid circuit of V1 within the range of 450 to 510 kc. Resistor R1 is the cathode resistor across which the grid-bias voltage is developed. Resistor R2 is a voltage dropping resistor and it is bypassed by capacitor C4 so that rf voltage is not developed across R2. The screen grid is connected to a voltage-dropping resistor R3, which is bypassed by capacitor C5. Resistor R4 and capacitor C6 form a decoupling network which prevents interaction between the various stages.

b. Amplified signals from V1 are inductively coupled to the control grid of mixer tube V3 by transformer T2. Fixed capacitor C3 and the primary winding of T2 form a tuned circuit in the plate circuit of V1. The circuit can be set to resonance at the input frequency by adjusting the iron slug in the primary winding. Once T1 and T2 are adjusted to the receiver if. frequency, no further adjustments are ordinarily required. Tube V27 serves as the rf amplifier for channel B. The theory of operation of this stage is the same as for channel A with the corresponding component parts serving identical purposes.

38. Oscillator

(figs. 17 and 18)

a. After being amplified by tubes V1 and V27, the input signals are heterodyned to a lower if. by beating with local signals generated by oscillators V2 and V28. In channel A, oscillator V2 produces a high frequency (hf) voltage which mixes in tube V3 with the rf signal from V1 for conversion to a lower frequency. This new if. is 50 kc

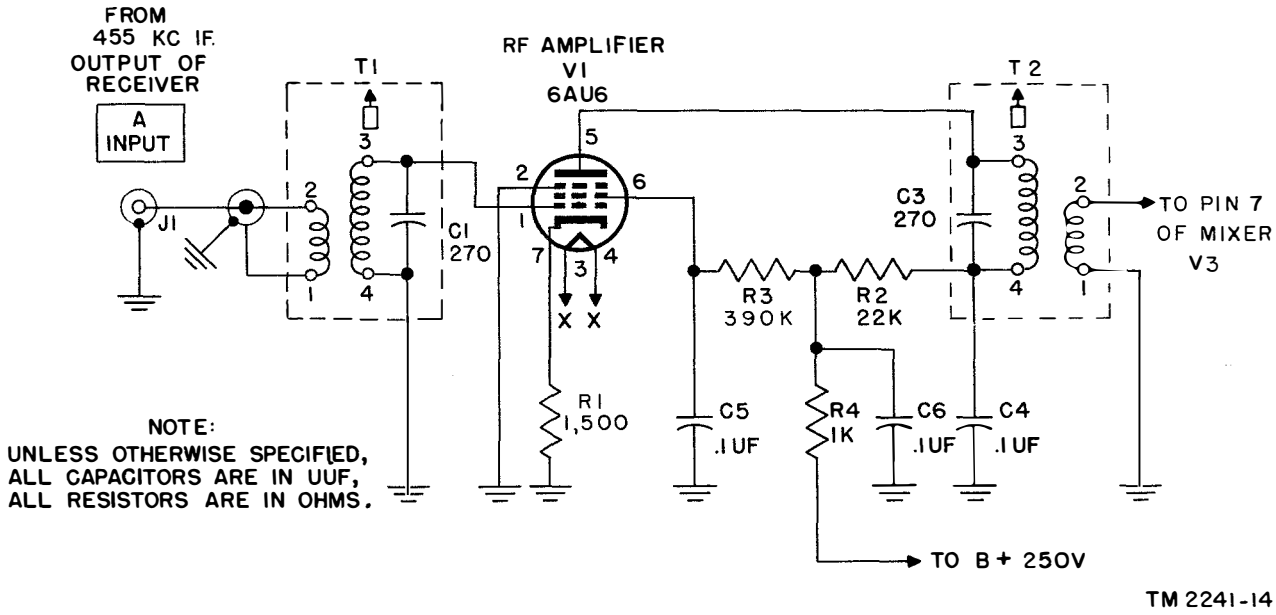

Figure 16. Channel A rf amplifier, simplified schematic diagram.

for channel A and 29.3 kc for channel B. These two signals are fed to the diversity circuits.

b. Each oscillator uses a dual-triode tube in a modified multivibrator circuit. A minute positive voltage applied at the control grid of section B of oscillator tube V2 will be amplified and appear, coupled through C15, at the control grid of section A. Section A further amplifies the signal and feedback is achieved through C14, C9, and S1E to the grid of V2B. Such an arrangement oscillates because each triode section produces a phase shift of 180°, the phase necessary to sustain oscillation. Resistors R9 and R18 are grid resistors for the two sections of tube V2. Resistors R16 and R17 are the plate load resistors. The oscillator output is coupled through capacitor C13 to the oscillator grid (pin 2) of the mixer tube, V3. The plate power supply for oscillator V2 is decoupled by R19 and C16. The circuit of oscillator V2 is identical with oscillator V28 in channel B.

c. The frequency of the oscillator can be controlled by either a crystal or a variable-frequency tuning circuit. When operated as a variable-frequency oscillator, the frequency may be controlled automatically by the afc circuit or manually by the DRIFT INDICATOR control C8, located on the front panel. The afc system corrects for carrier signal drifts up to plus or minus 2,000 cycles. For a detailed description of the afc circuits, see paragraphs 43 to 48. In channel A, the frequency is controlled either by crystal Y1 (fig. 18) or by the variable-frequency tuning circuit L1, C7, and C8. Selection is made by means of switch S1 located on the front panel. Switch S1 is a 5-position, 5-section switch marked AFC-XTAL-MARK HOLD on the converter panel. Two sections, D and E, are used in the oscillator for switching from one frequency control circuit to the other (fig. 18). In both XTAL positions, the crystal is series connected from the plate (pin 1) of V2A to the grid (pin 7) of V2B through S1E and feedback capacitor C14. Resistors R7 and R8 provide a voltage dividing network for the feedback circuit when operating with crystal control. Switch section D grounds the variable frequency tuning elements to make them inoperative on XTAL control. On MARK HOLD, the oscillator is crystal controlled and the switcs circuits of S1D and S1E are identical with those used on XTAL control.

d. In either AFC position, the variable frequency tuning circuit L1, C7, and C8 (in channel A) is connected to the oscillator tube in place of the crystal. The crystal is grounded through switch section D to make it inoperative on afc operation. When switch S1 is in the AFC position, the frequency is controlled either automatically or manually by the inductance-capacitance combination L1, C7, and C8. Under afc control conditions, tuning capacitor C8 is motor driven by a servo system to maintain correct tuning of the oscillator in the presence of drift of the input signals. The tuning combination L1, C7, and C8 has a frequency range of 400 to 460 kc. For channel B, tube V28 together with the crystal Y2, or the vfo tuning circuit L2, C59, and C60 form a similar oscillator having a frequency range of 420.7 to 480.7 kc. In all positions, the unused switch contact points are grounded to prevent coupling between the oscillator and other stages.

39. Mixer Stage

(fig. 19)

a. The mixer circuit uses a pentagrid converter. An incoming signal from a receiver having a 450–510 kc if. is mixed with an oscillator voltage 50 kc lower to form a new if. signal of 50 kc which is passed on to band-pass filter Z1. The second control grid (pin 7) is connected to the untuned secondary winding of transformer T2. The first control grid (pin 2) is coupled to the output of the oscillator V2 through C13. The oscillator output is applied across resistor R5. Resistor R6 is the cathode resistor across which the grid-bias voltage is developed. Capacitor C10 acts as a bypass for the if. signal. Resistor R11 is the screen grid dropping resistor and it is bypassed by capacitor C11 so that rf voltage is not developed across it. The plate resistor R12 serves to match the plate load impedance to that of the band-pass filter Z1. Resistor R10 and capacitor C12 form an rf decoupling network. For channel B, tube V29 and its associated components form a similar mixer stage which feeds terminals 1 and 2 of band-pass filter Z6. For example, when used with a receiver having a 455-kc if., the channel B oscillator is tuned to 425.7 kc which, when mixed with the incoming signal, produces a 29.3-kc if. output.

b. Band-pass filters Z1 and Z6 limit the bandwidth to approximately 1,500 cycles. This rejects certain noise frequencies and interference from other transmitting stations. They also suppress

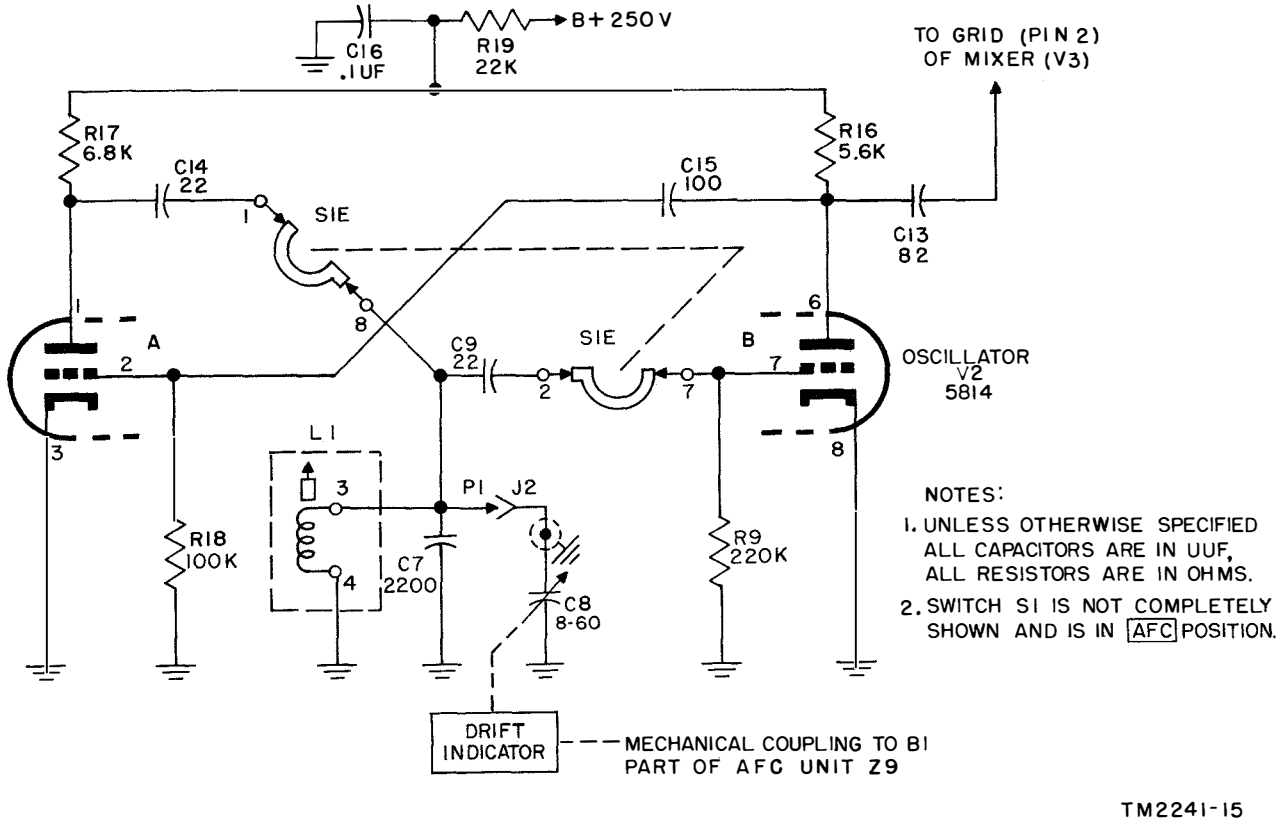

Figure 17. Channel A oscillator, schematic diagram.

the harmonics and sum frequencies produced in V3 and V29. The output of each filter works into a resistive load matching network consisting of resistors R13 and R14 across Z1 and R123 and R124 across Z6.

c. A difference exists between the circuitry of the channel A and channel B mixers. This difference occurs in the output connections of Z1 and Z6. The 50-kc signal of channel A suffers little attenuation in the matching network of Z1, while the 29.3-kc signal of channel B is attenuated nearly 6 db in the matching dividing network terminating Z6. Attenuating channels A and B by different amounts is necessary to compensate for gain inequality in other stages.

40. Diversity Limiting Amplifiers

(fig. 20 and 21)

a. Radio teletype signals, radiated from the transmitting antenna, vary in frequency in accordance with the original dc marking and spacing pulses, but are virtually constant in amplitude. In the radio link between the transmitter output and the converter input, these signals may encounter conditions which produce irregular variations in signal amplitudes. The limiting amplifiers in the diversity circuit minimize undesirable amplitude variations in the incoming signals before they are fed to the discriminators for detection.

b. The diversity limiting amplifiers, V16, V17, V18, V19 and V20, form three limiting stages and two peak-clipping circuits. There are two first limiting amplifiers, V16 for the output of channel A and V17 for the output of channel B. The outputs of V16 and V17 are coupled to the grid of the second limiting amplifier, V18. The plate of V16 is coupled to the control grid of V18 through coupling capacitor C34 and grid limiting resistor R76. For channel B signals, capacitor C41 and resistor R82 provide the necessary coupling from V17. Section B of CHANNEL SELECTOR switch S5 permits channel A, channel B, or channel A+B to drive the second limiting amplifier and, ultimately, the dc loop circuit for operating a teletypewriter printer. In position A, switch S5B grounds the plate of V17 to make channel B inoperative. Channel A is inoperative when S5B

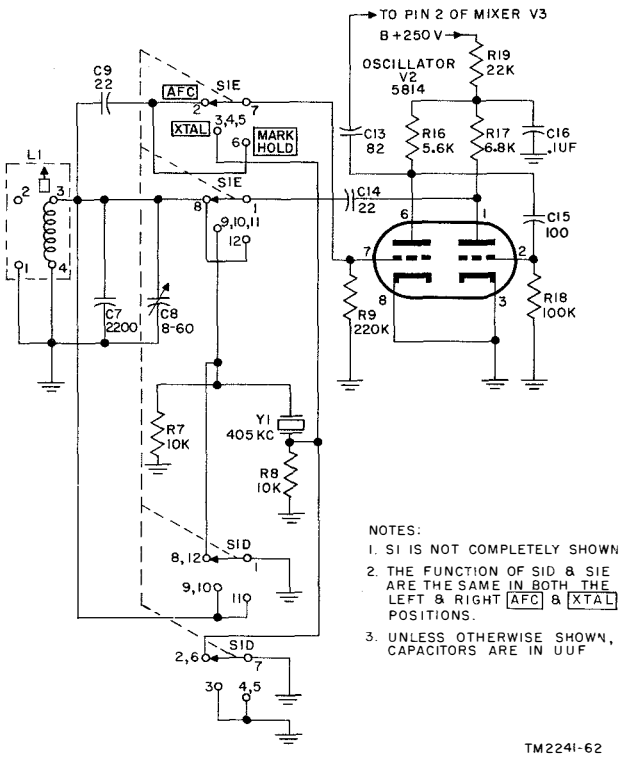

Figure 18. Switch S1 circuits for selecting variable-frequency or crystal oscillator operation.

is in position B, the plate of V16 being grounded through the switch. In position A+B, the plates of V16 and V17 are ungrounded permitting both channel A and channel B signals to feed V18.

c. Through S5, the CHANNEL SELECTOR switch on the front panel, the operator may elect to operate the converter through the channel A receiver, channel B receiver or, in diversity operation, both. How this is accomplished is shown schematically in figure 21. In figure 21, S5 is shown in the channel A, or fully counterclockwise position. In this position, section B of S5 grounds the plate of V17 and thus prevents the input from the channel B receiver from reaching the converter diversity section. In this position, section B also connects the alarm circuit (consisting of S4 and I 1) into the 115V line. Section S5A sets up the mark-hold circuit for channel A and deactivates it in channel B. This circuit is described in paragraph 42. In the channel B position, S5 performs functions similar to those performed in the channel A position. As can be seen in figure 21, when S5 is in the A + B position, the outputs from V16 and V17 are not grounded and the afc alarm and mark-hold circuits for both chanels A and B are activated.

d. Tubes V16 and V17 are sharp cutoff pentodes with the outputs combined at the control grid of V18. The input signal to each first limiting amplifier is taken from a resistive load matching network consisting of resistors R13 and R14 in channel A and R123 and R124 in channel B. Resistors R71 and R77 couple the signal to the grids of V16 and V17. Cathode resistors R72 and R78 provide the correct bias for their respective tubes and C37 and C38 act as the bypass capacitors. When the input signal to V16 becomes large enough, saturation takes place and no further increase in output voltage results. This saturation occurs over a wide range of input voltages. Actually, the gain of a limiter tube decreases as the input signal voltage increases and the result in an output signal of nearly constant amplitude. The gains

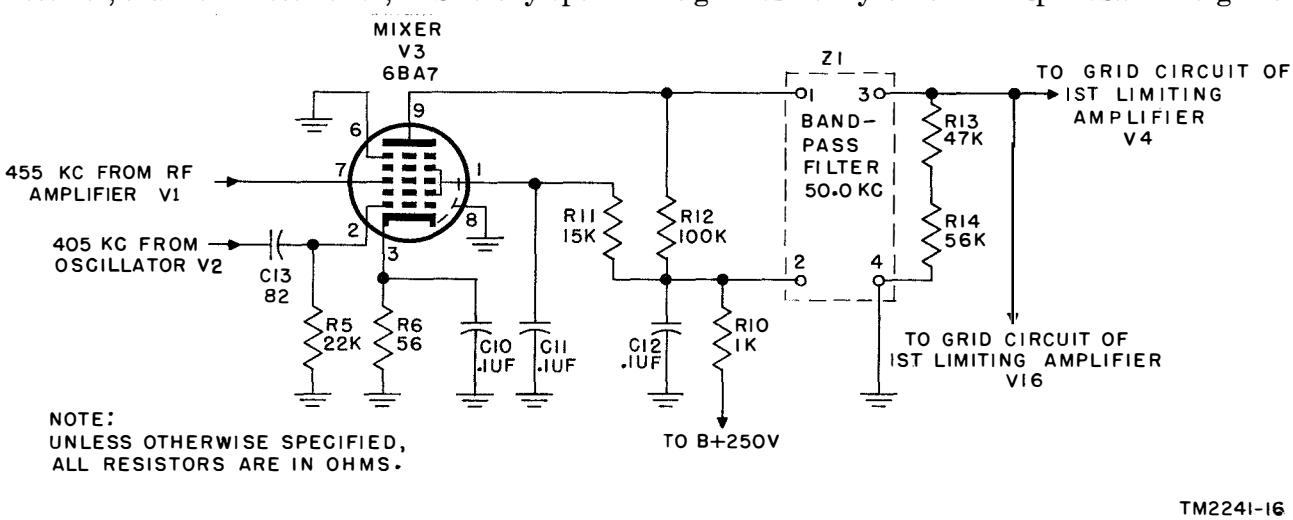

Figure 19. Channel A mixer stage, schematic diagram.

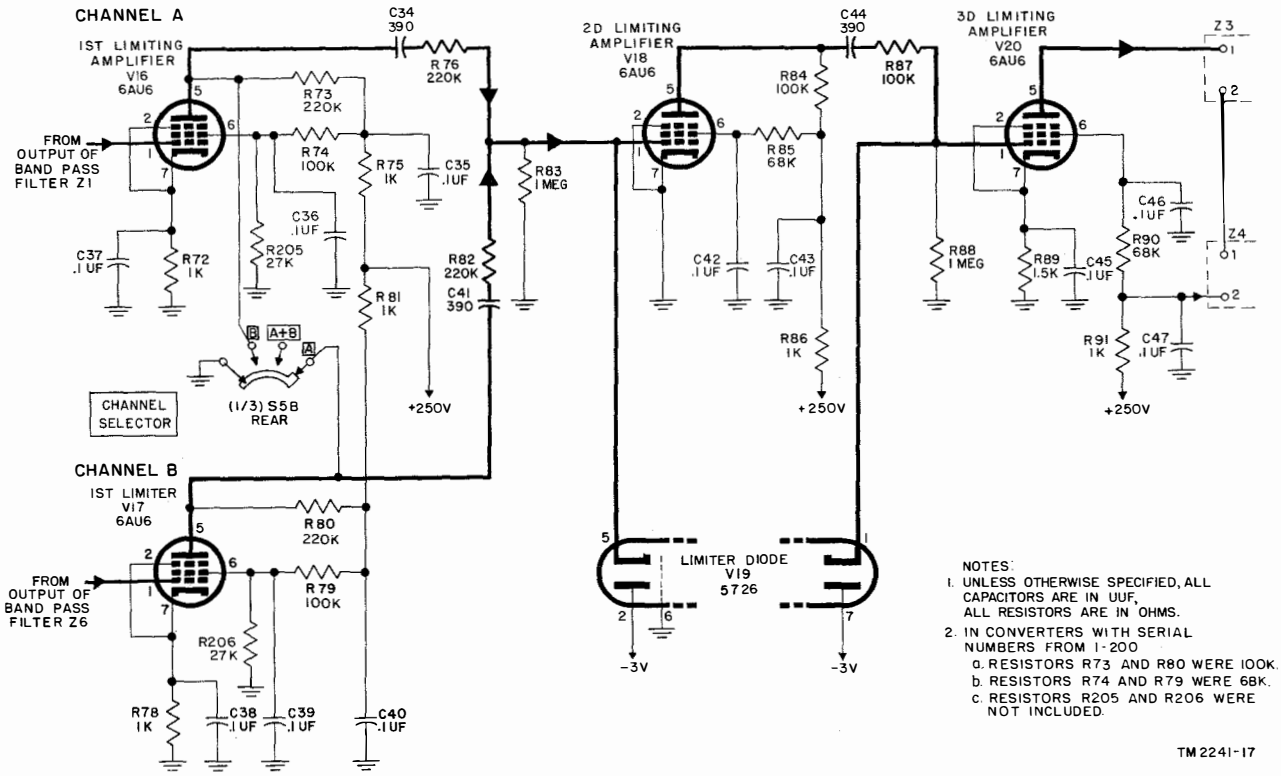

Figure 20. Diversity limiting amplifiers, schematic diagram.

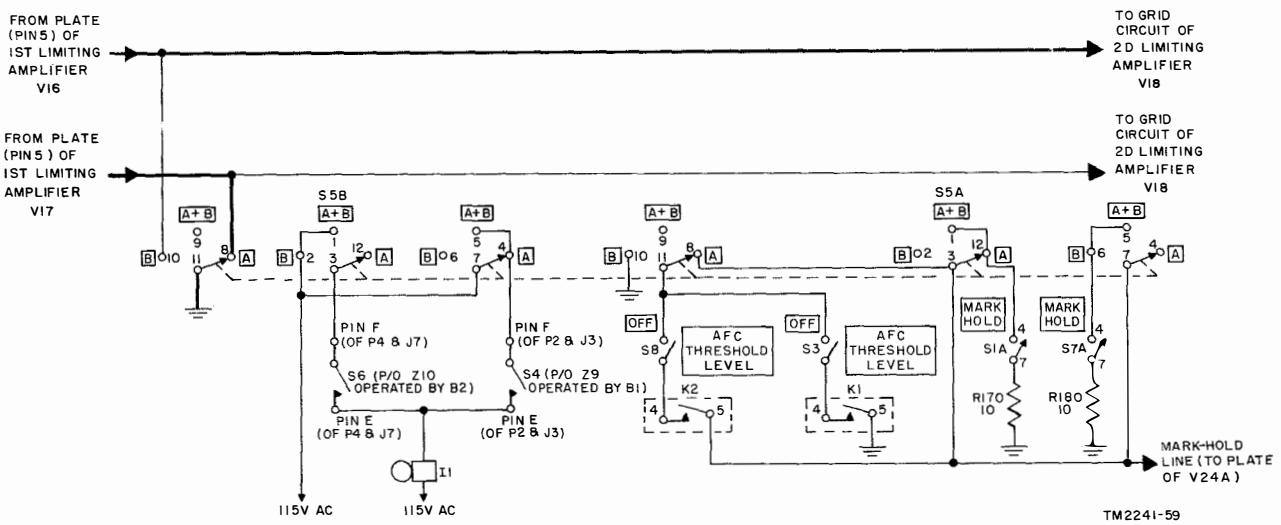

Figure 21. Switch S5, simplified schematic diagram.

of V16 and V17 are low for strong signals and high for weak signals. Resistors R73 and R80 are the plate load resistors. The voltage divider consisting of R74 and R205 fixes the screen grid voltage applied to V16, and the voltage divider consisting of R79 and R206 fixes the screen grid voltage applied to V17. Capacitors C36 and C39 bypass the screen grids of V16 and V17, respectively. The rf decoupling networks are formed by R75 and C35 and R81 and C40.

e. When the peak amplitude of a grid signal in either of the first limiting amplifier stages is small, limiting action does not take place. For this reason, additional limiter stages are required that will produce enough gain to provide sufficient signal voltage to saturate the final limiter with the smallest useful receiver signal.

f. The second limiting amplifier, V18, uses a sharp cutoff pentode in a grid-limiting type circuit. The signal input to the grid (pin 1) of V18 is through resistors R76 and R82 which serve to isolate the outputs of V16 and V17 from each other. At this point, the two signals are combined across grid resistors R83. This applied signal voltage is prevented from swinging too far in the negative direction by the action of limiter diode V19. This diode acts to prevent the grid voltage from dropping below −3 volts (*g* below). When the grid signal increases in the negative direction, the plate current of V18 decreases causing an increase in the plate voltage which continues until the grid voltage reaches −3 volts. At −3 volts, the plate voltage reaches a value which remains constant with further increase in negative signal. The screen grid voltage is applied to pin 6 through dropping resistor R85 which is bypassed by capacitor C42. Resistor-capacitor combination R86 and C43 form the decoupling network for the B+ circuits of V18. Resistor R84 is the plate load resistor.

g. Diode limiter V19 is a dual diode with each section connected in a separate peak-clipping circuit. The first section (pins 5 and 2) limits the signal on the grid of V18 to voltages more positive than −3 volts. In the same manner, the second diode section (pins 1 and 7) limits the signal on the grid of V20 to voltages more positive than −3 volts. As long as the input signal to either tube is more positive than the −3 volts on the plate, the diode limiter section is effectively an open switch. When the input to a diode section becomes more negative than −3 volts, the diode conducts heavily and effectively connects the grid of V18 or V20 to the −3 volt supply. Thus, each signal on the grids of V18 and V20 is limited to a maximum negative value of 3 volts.

h. The third limiter, V20, utilizes a sharp cutoff pentode in a combination grid-clipping and screen-gain limiting circuit. Capacitor C44 couples the signal from V18 to V20, and R87 prevents overloading tube V18 when diode V19 conducts. The input voltage to the control grid is developed across R88. Bias voltage is developed by resistor R89 which is bypassed by capacitor C45. Resistor R90 serves as a screen voltage-dropping resistor and is bypassed by capacitor C46. Plate voltage is applied through the primary windings of the discriminator transformers in Z3 and Z4 connected in series. The high voltage circuit is decoupled by means of the network composed of capacitor C47 and resistor R91.

41. Diversity Discriminators

(figs. 22 and 23)

a. The diversity discriminator diodes V21 and V22 convert frequency-shift signals from the diversity-limiting amplifiers into corresponding dc marking and spacing signals. Tube V21 converts the frequency-shifted signals received over channel A, and V22 converts the frequency-shifted signals received over channel B. These two dc voltages then are combined in the series arrangement of the discriminator output circuits. The dc output voltages at terminals 5 and 6 of the discriminator networks Z3 and Z4 will vary in polarity and magnitude in the same manner as the original mark-space signals.

b. Referring to figure 23, the T_A and T_B secondary windings of the transformer of Z3 are tuned to resonate, respectively, at approximately 1,000 cycles above and below 50 kc. The upper winding, T_A, is connected in series with the resistance across terminals 5–9 of Z3 and one section of V21. With the two diode sections connected as in A, figure 23, the currents of the two circuits flow in the direction indicated by the arrows. The polarities of the voltage drops across terminals 5–9 and 9–6 of Z3 are positive at the ends connected to the cathodes of V21, and negative at the common point, terminal 9. The two voltage drops, therefore, oppose each other, and the resultant voltage across terminals 5 and 6 of Z3 is the difference between the two voltages. The resultant polarity depends upon which of these two voltages is

greater. If the voltages across the diode load resistances are equal, the net output voltage will be zero. At the center frequency of the discriminator, equal if. signal voltages are applied to the two diode rectifiers, the rectified output of each is the same, and the net output voltage is zero.

c. A frequency-response characteristic curve is shown in figure 23Ⓑ. It indicates general voltage levels for tuned windings T_A and T_B of Z3 for frequencies centering around 50 kc. The curves designated as MARK and SPACE represent the voltages across resistances 5–9 and 6–9, respectively. The voltage drops across these resistances are connected series-opposing. Therefore, the resultant voltage across output terminals 5 to 6 may be illustrated as shown under Z3 when terminal 6 is connected to ground and the output is taken from terminal 5. From this curve it will be noted that the resultant voltage increases gradually in a positive direction as the frequency changes from 50 kc to higher frequencies and gradually becomes more negative as the frequency changes from 50 kc to low frequencies. Throughout the frequency range involved in frequency-shift keying, there is a linear relation between the magnitude of the resultant voltage and the frequency change. Capacitor C48 permits tuning one curve over a range of ±150 cycles without changing its linearity. Capacitor C49 tunes the other curve. These discriminator tuning capacitors are adjustable from the rear of the chassis (fig. 9). Resistor R202 eliminates residual discriminator curve skirt-response to undesirable components of the 29.3-kc signal. Capacitor C92 resonates the secondary of discriminator Z3 at 50 kc.

d. A similar demodulation takes place in the channel B discriminator network Z4, which responds to frequencies centering around 29.3 kc. The total output voltage of network Z4 is the result of the sloping responses of the two individual secondary tuned circuits, with each providing output of opposite polarity because of the balanced arrangement of the diode sections of tube V22. The discriminator tuning capacitors C50 and C51 are adjustable from the rear of the chassis (fig. 9). Resistor R203 eliminates residual discriminator curve skirt-response to undesirable components of the 50-kc signal. Capacitor C93 resonates the secondary of discriminator Z4 at 29.3 kc.

e. Figure 25 shows the individual **S**-shaped dis-

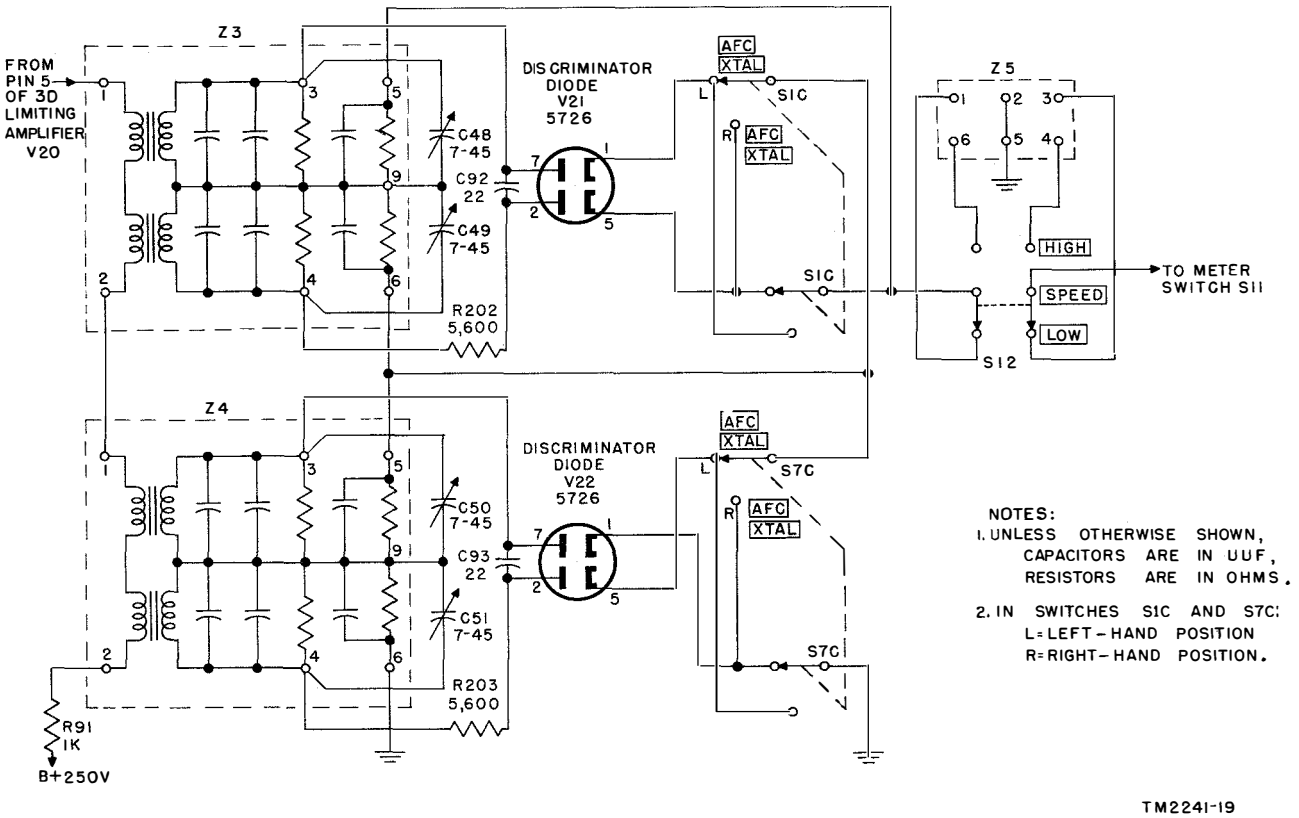

Figure 22. Diversity discriminator stage.

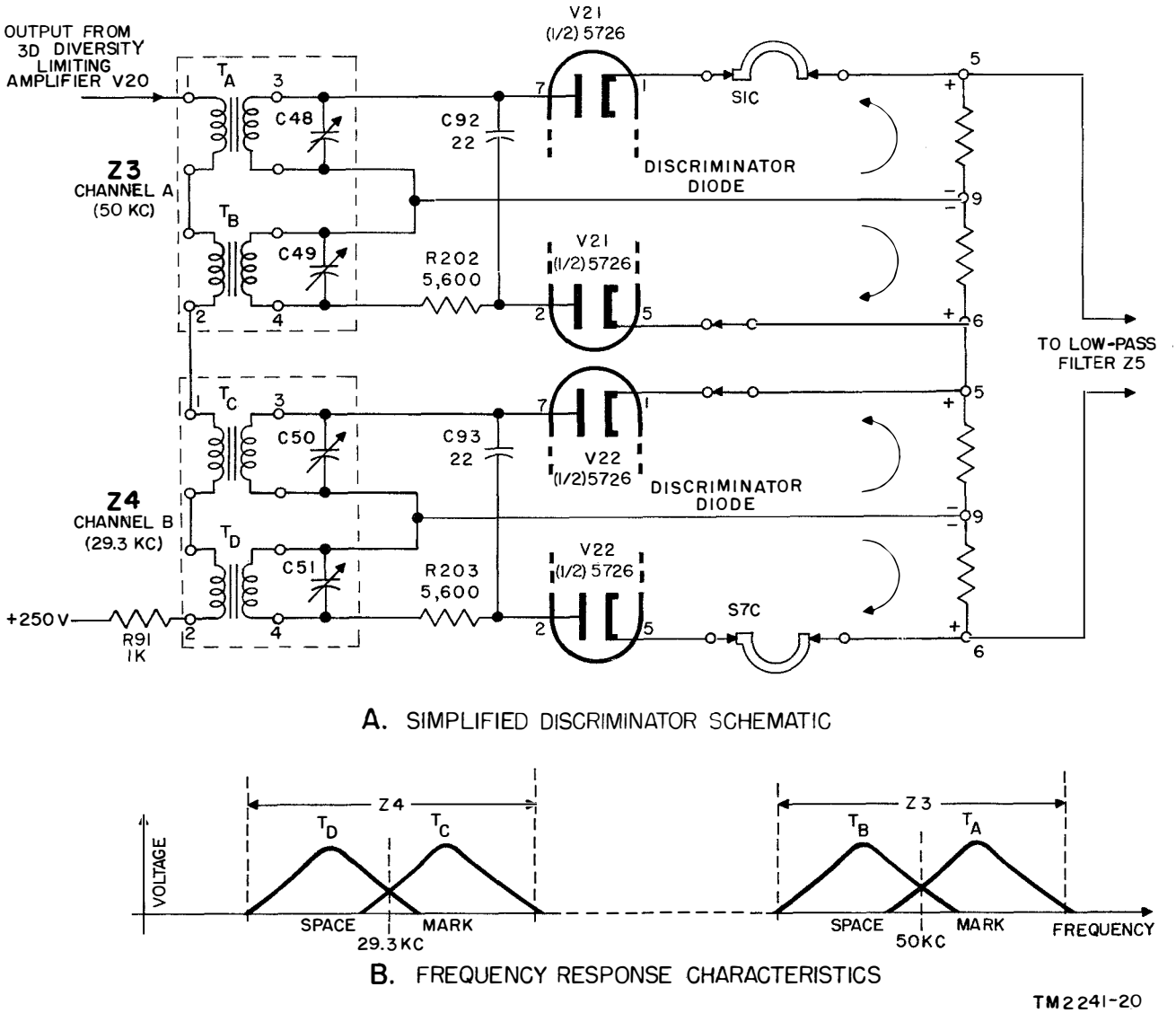

Figure 23. Discriminator operation.

criminator response curve for Z3. The curve for Z4 has the same shape but the center frequency is 29.3 kc. Positive and negative peaks on the **S**-curve occur at the resonant frequency for each of the two secondary tuned circuits. It should be noted from figure 23 that the output of Z3 and Z4 are connected in series, so that the dc output signals from both discriminators are added. For the purpose of illustration, it is assumed in figure 24 Ⓐ that a positive mark signal results from the higher frequencies centering around 29.3 kc and 50 kc. Depending on the relative locations of the frequencies, a larger voltage E is produced in the upper part of each discriminator and a smaller voltage is produced in the lower part. The voltages add to produce a net positive voltage (+2E−2e) or a net negative voltage (−2E+2e). Under the conditions assumed for this illustration, the positive voltage represents a mark and the negative voltage a space. Switch sections S1C and S7C, in the output circuits of the two discriminators, allow for reversing the polarity of the output signals (fig. 24 Ⓑ). The method of reversing the discriminator connections to always provide a net positive voltage for a mark and a net negative voltage for a space is illustrated in figure 24 Ⓑ. Reversal of output polarity in channel A is accomplished by section C of switch S1 which reverses

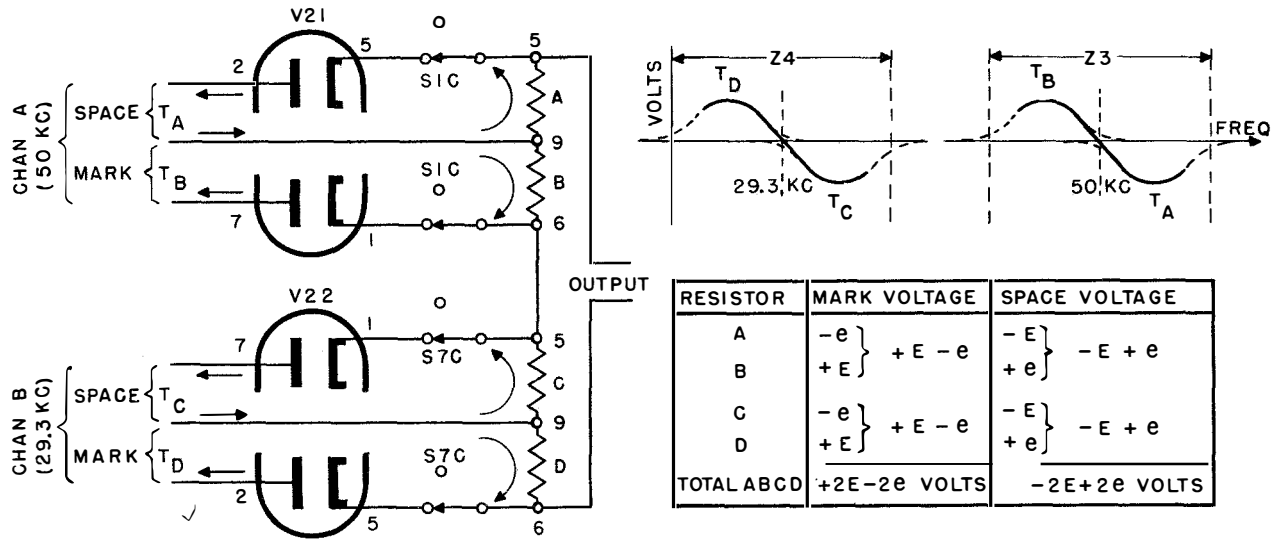

RESISTOR	MARK VOLTAGE	SPACE VOLTAGE
A	−e } +E −e	−E } −E +e
B	+E	+e
C	−e } +E −e	−E } −E +e
D	+E	+e
TOTAL ABCD	+2E−2e VOLTS	−2E+2e VOLTS

A. POSITIVE MARK SIGNALS (SWITCHES S1 AND S7 IN LEFT-HAND POSITIONS)

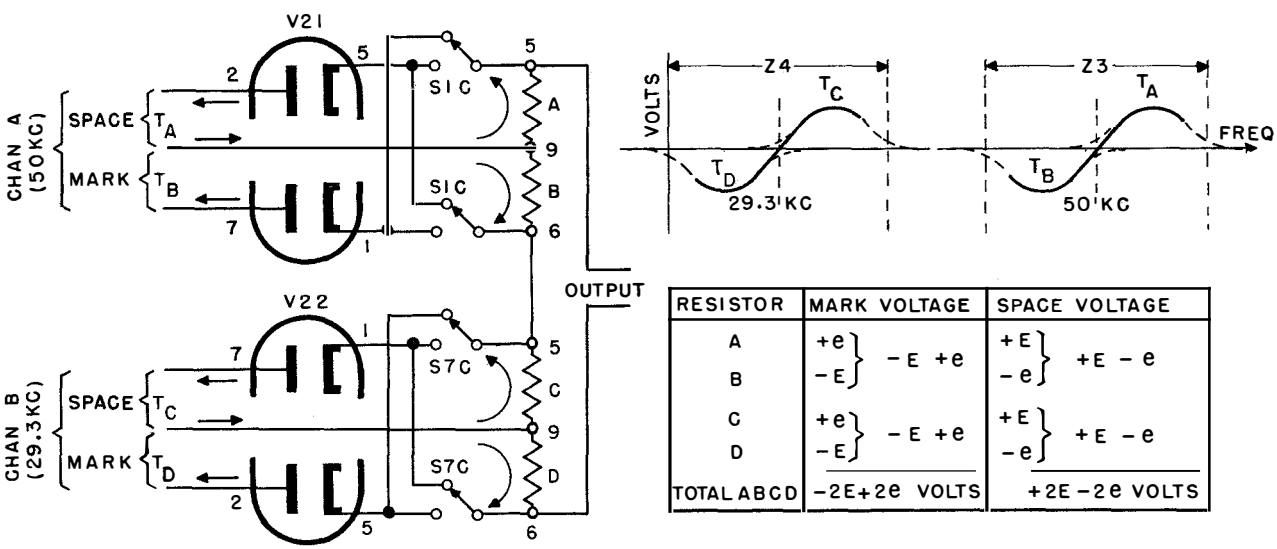

RESISTOR	MARK VOLTAGE	SPACE VOLTAGE
A	+e } −E +e	+E } +E −e
B	−E	−e
C	+e } −E +e	+E } +E −e
D	−E	−e
TOTAL ABCD	−2E+2e VOLTS	+2E−2e VOLTS

B. NEGATIVE MARK SIGNALS (SWITCHES S1 AND S7 IN RIGHT-HAND POSITIONS)

TM2241-21

Figure 24. Discriminator theory diagram.

the cathode connections to tube V21. For channel B, section C of switch 7 is used to reverse the cathode connections to tube V22.

f. The combined outputs of the diversity discriminators are applied to a low-pass filter, Z5, which filters out any remaining if. signals. Since the combined filtered outputs of Z3 (positive dc pulses) and Z4 (negative dc pulses) appear at the output of Z5, the signal delivered from Z5 to the grid of keyer amplifier V24 is polar in nature. Meter M4 may be placed across the output of the low-pass filter Z5 to observe the operation of the discriminator (par. 50*g* and fig. 39). This is accomplished by placing the metering-circuit selector switch, S11, in the A+B position, pushing PRESS TO TEST switch, and observing the channel A DISCRIMINATOR meter on the front panel.

g. HIGH-LOW-SPEED switch S12 (fig. 22) selects the section of low-pass filter Z5 to be inserted between the discriminator section output and the input to the keyer circuit. The LOW position is used for keying speeds up to 38 dot cycles per second. For keying speeds over 38 dot cycles per second, the HIGH position is required. The low speed section of Z5 is used normally.

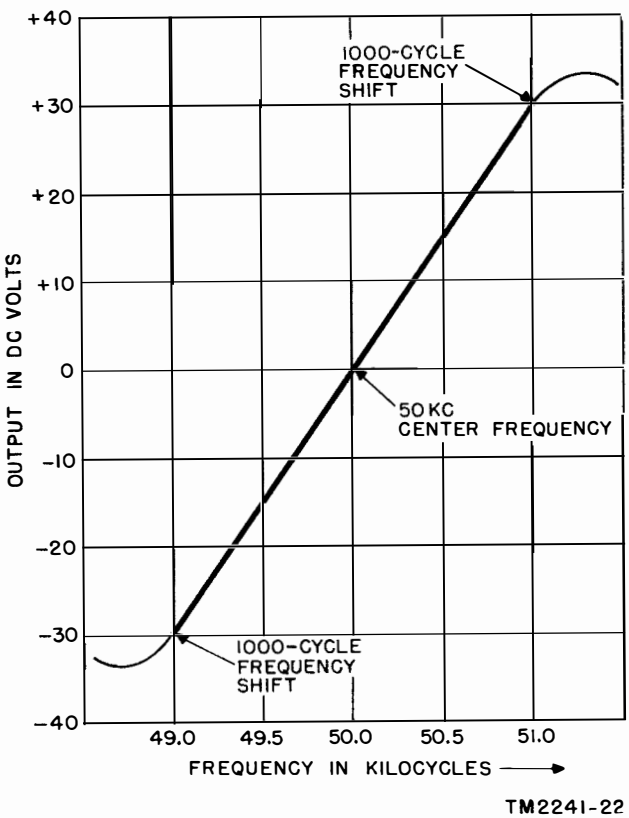

Figure 25. Discriminator response curve.

42. Keyer Circuit

(fig. 26–29)

a. The keyer circuit amplifies the dc pulses from the discriminator output. It opens or closes the loop supply which applies neutral dc pulses to jack TT J4 for operation of the teletypewriter printer. Each stage has a potentiometer which is adjusted initially to provide the correct operating bias for the succeeding stage. The keying circuit has provision for holding a mark signal on the teletypewriter loop circuit if the incoming carrier fades or is shut off for any reason. Either AFC-XTAL-MARK HOLD switch, S1 or S7, also may be used to put a mark signal on the teletypewriter loop circuit.

b. Resistor R95, potentiometer R94, and V23A (section one of a dual-triode tube) with grid resistor R92 form a cathode follower circuit. This stage serves as a buffer between Z5 and the keyer amplifier stage to prevent loading of the low-pass filter circuit. No voltage inversion or gain results from the use of the cathode follower. Dc output voltage is fed to the keyer amplifier, V24A, through grid limiting resistor R96. With the grid of V23A grounded through the meter switch S11 and the PRESS TO TEST switch S10 (fig. 39), R94 is adjusted for approximately −8 volt bias at the grid (pin 2) of keyer amplifier V24A. Correct bias will be indicated on the channel A DISCRIMINATOR meter by a zero reading. Dc signals from the cathode follower are amplified by keyer amplifier V24A. Resistor R97 serves as the plate load resistor for V24A. A voltage dividing network is formed by resistors R97, R98, and R100 and potentiometer R99. When the input to the cathode follower circuit is grounded (as outlined above), potentiometer R99 is adjusted for a bias of 0 volts on the grid (pin 7) of the space keyer V24B. Resistor R101 serves as a grid-limiting resistor for tube V24B and resistor R102 is the plate load resistor. A voltage divider network is formed by resistors R102, R103, and R105 and potentiometer R104. The slide arm of potentiometer R104 is connected to the grids of the mark-keyer tubes and is initially adjusted to −35 volts.

c. Mark-keyer tubes V25 and V26 are parallel-connected beam-power amplifier tubes. The control grids and the screen grids are isolated by resistors R107 and R108, respectively. With a bias

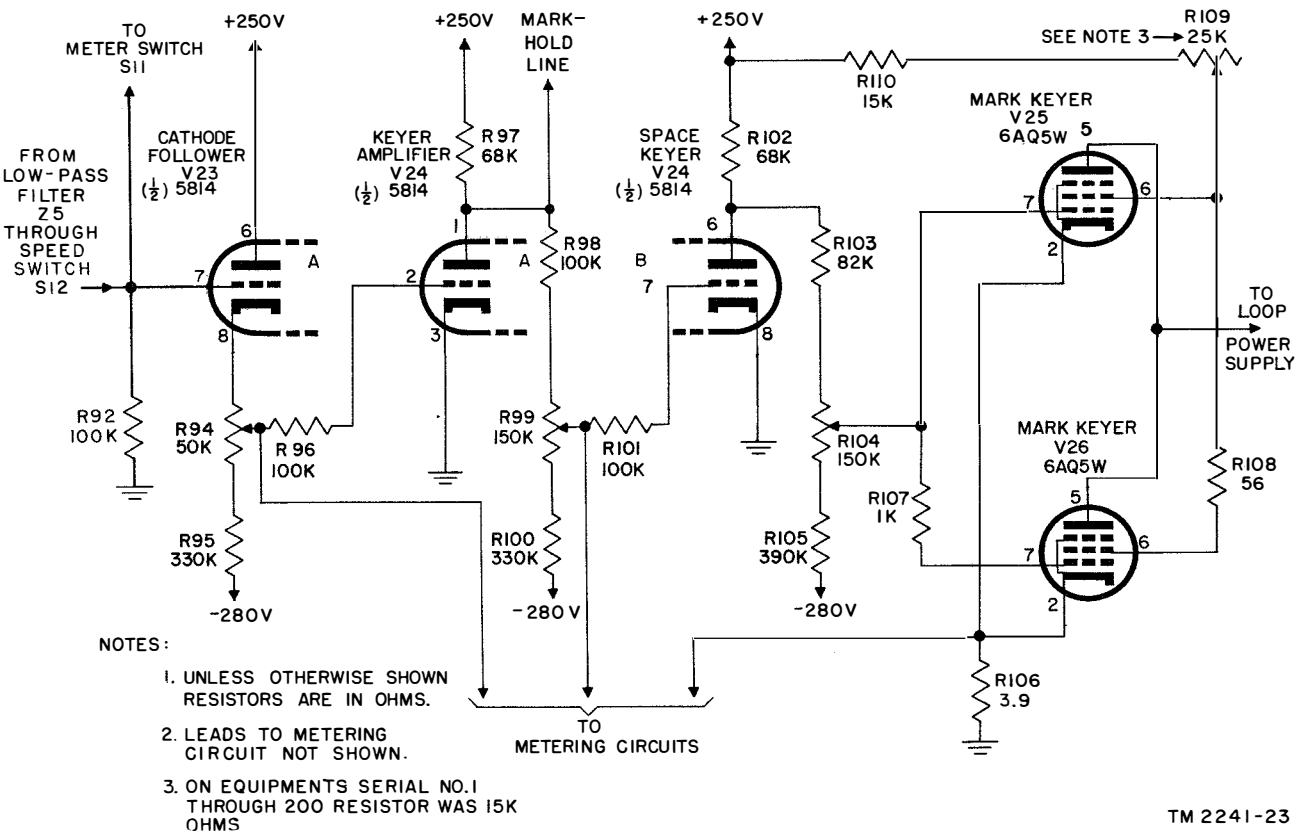

Figure 26. Keyer circuit, simplified diagram.

of −35 volts on the grids, the two mark-keyer tubes are cut off. When the grids of V25 and V26 are driven positive by a mark signal, the tubes conduct. The electron path (fig. 27) is from the negative side of the loop power supply, through the TT jack to the cathodes of V25 and V26, thence to the plates and back to the positive side of the loop supply. Effectively, this action keys the loop power supply which operates the tty selector magnet. Potentiometer R109 adjusts the screen voltages to produce a mark output current to J4 of approximately +60 ma for a given printer load. When metering this current on M4, resistor R106 serves as a meter shunt (par. 50).

d. Figure 28 shows polarity relationships for the keyer circuit. Dc mark-space pulses from the discriminator are fed through network Z5 to the cathode follower, V23A. A positive mark signal appearing at the grid of V23A will cause the tube to draw current through R96, thus causing the grid of keyer amplifier V24A to become more positive with respect to its cathode. In drawing more current, the plate of V24A becomes more negative and this change, reflected through R98, R99, and R101, makes the grid of space keyer V24B become more negative. Therefore, V24B conducts less current and the change in its plate voltage toward a more positive condition is reflected through R103 and R104 at the grid of mark-keyer V25 and

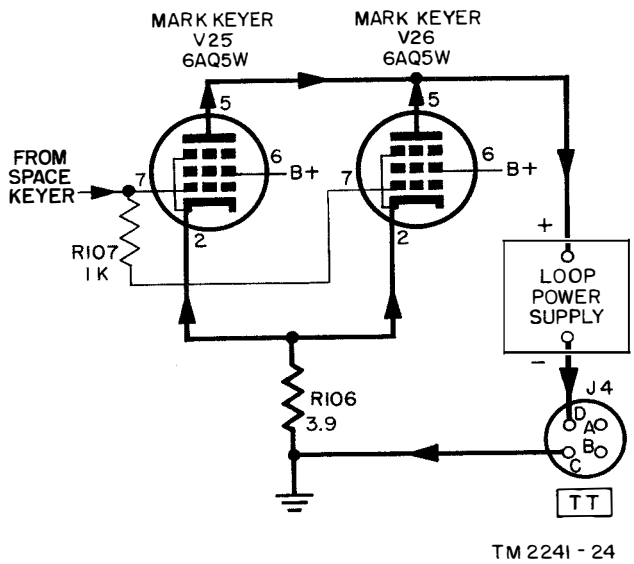

Figure 27. Simplified loop current circuit.

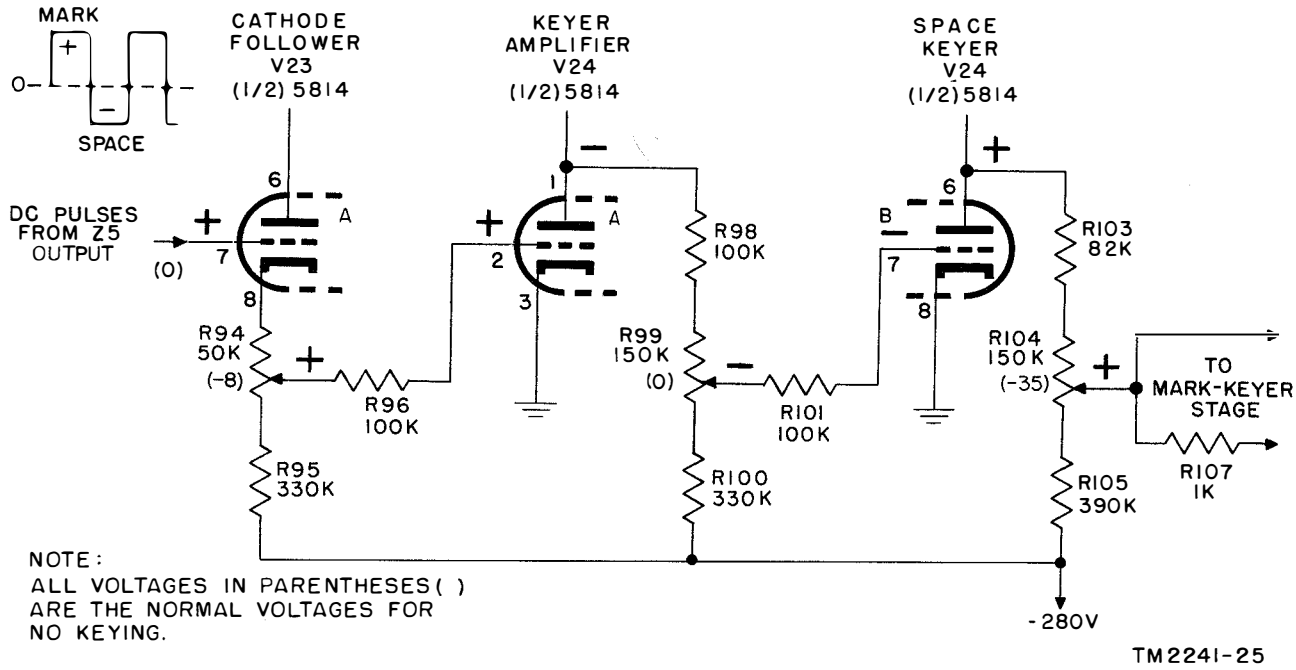

Figure 28. Keyer circuit polarity relations, theory diagram.

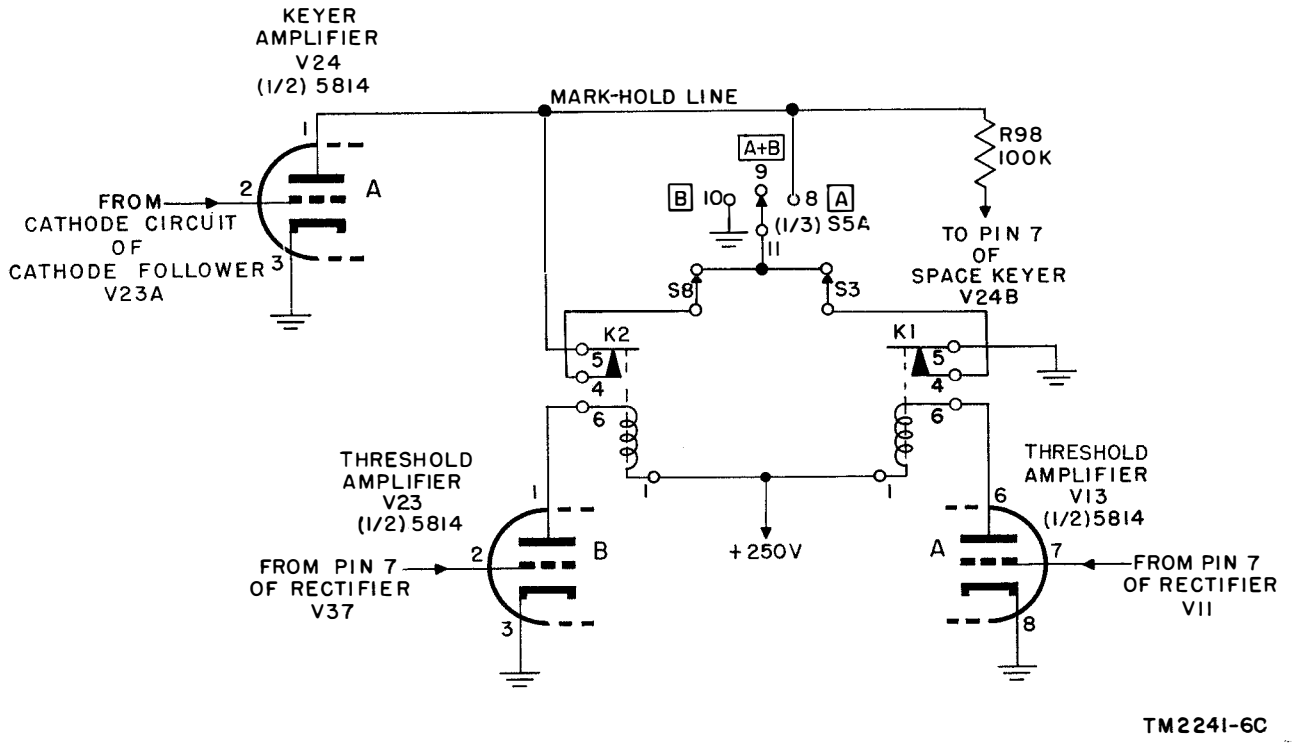

Figure 29. Mark-hold circuit, simplified schematic diagram.

through R103, R104, and R107 at the grid of mark-keyer V26. A space (negative) signal applied at the grid of V23A causes an opposite reaction to occur. The title *space keyer* has been applied to V24B not because it keys the teletypewriter printer loop circuit with a space character, but because the tube itself conducts (and is thus *keyed*) when a negative signal is present at the contact grid of V23A. The function of V24A and B is to cause V25 and V26 to conduct or not conduct depending upon the mark or space output from the discriminator circuit. V25 and V26, in turn, influence the current flow in the teletypewriter loop circuit. A +2-volt input from the discriminators will drive V25 and V26 tubes to full conduction.

e. If, for any reason, the rf carrier in both channels fails, relays K1 and K2 (fig. 29) ground the plate of keyer amplifier V24A. This places the grid (pin 7) of V24B at a negative potential and the voltage at the slider arm of potentiometer R104 at a positive potential. Tubes V25 and V26, therefore, will conduct and produce the same effect that exists when a mark signal is transmitted through the keyer circuit. This condition is maintained as long as the carrier is shut off, but is removed automatically as soon as the carrier is again received. Both relays must be closed when CHANNEL SELECTOR switch S5 is in the A+B position if the carrier-control mark-hold circuit is to operate. When both relays are energized, the plate of tube V24A is connected to contacts 4-5 on K2, through switches S8 and S3 to contacts 4-5 on K1, and then to ground. For single-receiver operation, only the relay associated with the particular channel circuit being used is connected by S5A for the carrier-control mark-hold feature.

43. Afc Limiter Amplifier

(fig. 30)

a. During operation, the 50- and 29.3-kc intermediate frequencies may drift. If no corrective means were provided for such conditions, the teletypewriter dc output signals would be biased or distorted. To minimize the biasing effect, part of the signal from the input circuits is fed to separate afc circuits. If the intermediate frequency changes for any reason, the afc circuit brings it back to its proper value by mechanically tuning the oscillator. To connect either afc circuit, AFC switch S2 must be in the ON position, the AFC-XTAL-MARK HOLD switch S1 (or S7 in channel B) must be turned to an AFC position, and the AFC SHIFT ADJUSTMENT must be set for the proper mark (par. 45). The first section of each afc circuit consists of a four-tube limiting amplifier to remove undesirable amplitude variations from the frequency shift signals and also to apply a constant voltage to the input of the afc discriminator diode V8.

b. Band-pass filter Z1 of channel A is terminated with the resistive load formed by resistors R13 and R14. The signal from Z1 is fed to the grid (pin 1) of the first limiting amplifier V4, through grid current limiting resistor R15. Tube V4 is a sharp cutoff pentode. Low level positive and negative peaks, between plate saturation and cutoff of the tube, are amplified. High-level signals, however, cause V4 to be driven to cutoff and plate saturation on negative and positive peaks, respectively. At the point of plate saturation, grid current flows through R15 and develops a negative bias which effectively reduces positive peak input signals. On high negative peaks, the tube is cut off. Therefore, any undesired voltage peaks impressed on the carrier are clipped. Cathode bias resistor R20 is bypassed by capacitor C17. The screen grid voltage is taken from the junction of the divider network consisting of R204 and R22. This screen grid voltage controls the stage gain. Capacitor C19 is the screen bypass capacitor. Resistor R23 is the plate load resistor and resistor-capacitor combination R21 and C18 forms a decoupling network. The output from the plate of tube V4 is coupled to tube V5 through coupling capacitor C21 and resistor R24. The output from the plate also is applied, through coupling capacitor C20, to the cathode of signal rectifier V11.

c. The low-level signals, too small to cause plate saturation or cutoff in V4, are amplified by V5, a sharp cutoff pentode. The higher level signals have the undesired negative peaks clipped by the operation of one section of V6, a dual-diode tube. A negative voltage is applied to the plates of V6. Peaks more negative than −3 volts from the output of V4 cause the cathode (pin 1) of V6 to become more negative than the plate. This condition causes current to flow heavily, effectively creating a short circuit and removing the negative peaks. The positive peaks, after amplification in V5, become negative peaks at the plate of V5 because of the 180° phase reversal between the control

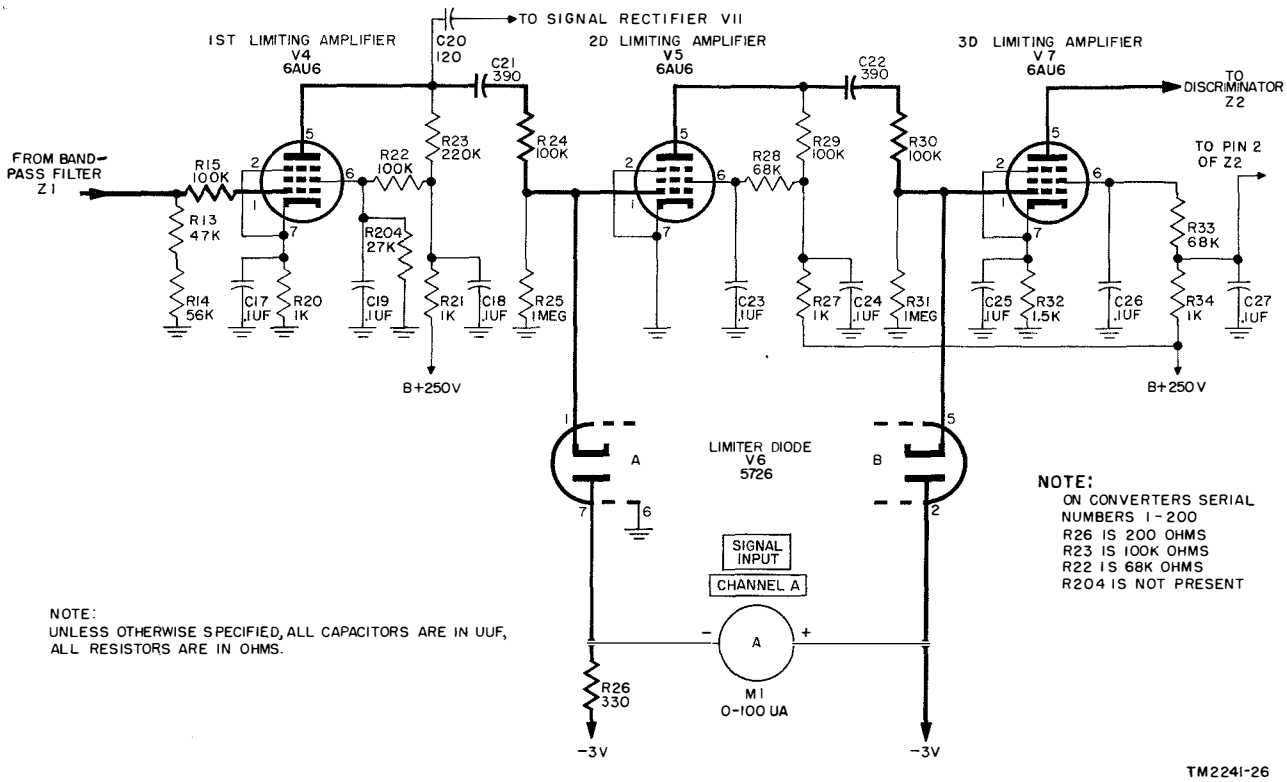

Figure 30. Afc limiter amplifier, simplified schematic diagram.

grid and plate. This strong negative peak is applied to the other cathode (pin 5) of tube V6. Peaks more negative than −3 volts make the cathode more negative than the plate, causing current to flow through the tube and remove the negative peaks. Accordingly, weak or strong input signals are approximately at the same level when they are applied to the grid (pin 1) of V7 for further amplification. The output from V7 is applied to the primary winding of the 50 kc discriminator transformer in Z2.

d. Meter M1, connected across pins 2 and 7 of V6, serves as a SIGNAL INPUT indicator for channel A. The meter will read on inputs as low as 100 microvolts. Resistor R26 is shunted across M1 to prevent damage to the meter in the presence of strong signals.

e. Tubes V30, V31, V32, and V33 form a similar limiting amplifier for channel B afc signals. Channel B differs slightly from channel A at the output of band-pass filter Z6. The output of band-pass filter Z1, in channel A, is delivered to a simple resistive matching network. In channel B, a matching-dividing network is used to attenuate the output of Z6. The additional attenuation in channel B is used to compensate for a difference in gain between the 50 kc channel A if., and the 29.3 kc channel B if. This difference in gain occurs in other stages. The matching-dividing network in the output of Z6 consists of the simple L attenuator formed by resistors R123 and R124. These resistors are shown in the complete converter schematic, figure 62. The output from V33 is applied to the primary winding of the 29.3 kc discriminator transformer in Z7.

44. Afc Discriminator

(fig. 31)

a. The afc discriminator circuit produces a dc voltage change at the grids of V9 for any drift in the intermediate frequency. This dc *error* signal, after amplification, controls a motor-driven capacitor, C8, which brings the if. to its proper value by tuning the oscillator until the *error* is zero. Any if. drift is undesirable since it results in a distorted signal at the diversity discriminators.

b. The operation of the afc discriminators is similar to that of the diversity discriminators. Refer to paragraph 41*a* through *c*. In channel A, one secondary winding of the transformer of Z2

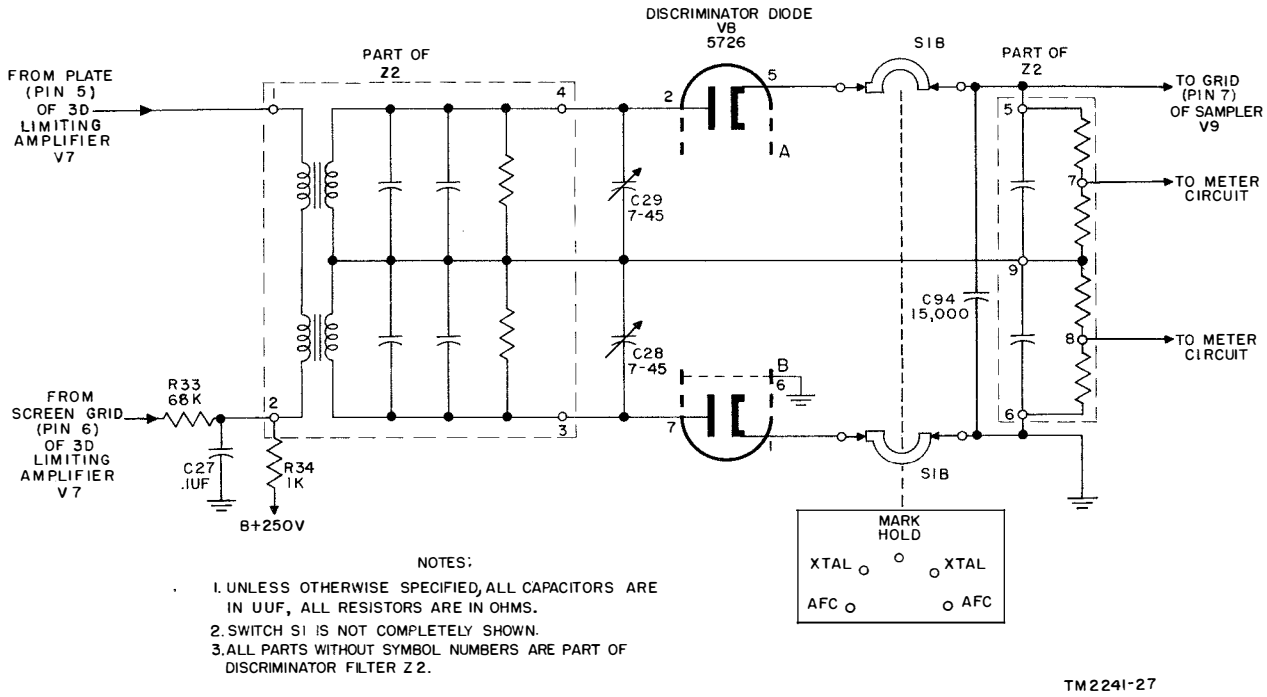

Figure 31. Afc discriminator, simplified schematic diagram.

is tuned to approximately 1,000 cycles above 50 kc and the other winding to approximately 1,000 cycles below 50 kc. Neither secondary tuned circuit is resonant at the center frequency of 50 kc, but both are off resonance by approximately the same amount. At 50 kc, the signal voltage developed across each secondary tuned circuit will be relatively small and have the same magnitude. Therefore, equal and opposite signal voltages are coupled to the two diodes of V8 at 50 kc, the rectified output voltages are the same across each resistive load but of opposite polarity, and the net output voltage is zero. When the if. signal is above 50 kc, the secondary tuned circuit between terminals 4 and 9 develops a greater voltage because the intermediate frequency is closer to the resonant frequency of this tuned circuit. The secondary voltage developed across the tuned circuit between terminals 9 and 3 is now less than at 50 kc because the if. is further removed from its resonant frequency. With less signal voltage applied to diode pins 1 and 7 and more to diode pins 2 and 5 for an if. drift above 50 kc, the pins 2 and 5 diode provides greater rectified output voltage than the other diode and a net output voltage of positive polarity is obtained. The positive voltage increases linearly for an increasing shift away from 50 kc, up to approximately 1,000 cycles. Similarly, the output voltage is negative when the if. is below the center frequency of 50 kc. A typical **S**-shaped discriminator response curve is shown in figure 25. For channel B, the operation of the afc discriminator is identical except that the center intermediate frequency is 29.3 kc. Capacitors C94 and C95 are connected across the discriminator load resistors of V8 and V34, respectively. The capacitors serve to bypass the high frequency components of the detected signal information.

c. Switch sections S1B and S7B, in the output circuits of the two afc discriminators, allow for reversing the polarity of the dc output signals. This provides a means for always having a net positive voltage for a mark and a net negative voltage for a space. Reversal of output polarity in the channel A afc circuit is accomplished by section B of switch S1 which reverses the cathode connections to tube V8. For channel B, section B of switch S7 is used to reverse the cathode connections to the diode discriminator, V34.

d. Meter M3 (fig. 62) is connected across output terminals 7 and 8 of transformer discriminator Z7 to allow for observing the operation of the discriminator. An identical meter M4 is connected

across the output of discriminator transformer Z2 through contacts of PRESS TO TEST switch S10. Meter M4 is also used for other electrical measurements in the converter circuit and is connected to the various circuits by switch S11 (par. 50).

45. Sampler and Shift Reference Stages
(fig. 32)

a. Each sampler stage uses a dual triode, V9 in channel A and V35 in channel B. The two grids (pins 2 and 7) of each sampler tube are tied together and connect to the outputs of their respective discriminator networks, Z2 for channel A and Z7 for channel B. Load resistors R37 and R147 are also connected to the outputs of Z2 and Z7, respectively. Referring to channel A, positive and negative pulses, representing mark-space signals, are applied to the grids of V9 which is biased by cathode resistor R38. On mark signals, the grids of V9 become positive and conduction takes place. This charges capacitor C30 with a voltage which depends on the discriminator output for a given frequency shift. The charge on C30 remains nearly constant as long as the mark frequency input to Z2 does not change. A change in frequency shift is compensated by the AFC SHIFT ADJUSTMENT control (*c* below). However, a change in if. frequency will result in a change in the positive voltage representing a mark pulse. This changes the charge on C30 which, in turn, changes the bias on the shift reference tube, V10A. When a space (negative) signal is received, V9 is driven to cutoff. Under this condition, V9 acts as an infinite impedance to the charge on C30 and capacitor C30 maintains its charge since there is no other path for discharge. This action holds the grid of V10A at a positive potential.

b. Any if. frequency drift fed to the afc discriminator will cause the mark (positive) voltage applied to V9 to become more or less positive, depending on the direction of the drift. A drift toward a higher frequency increases the positive voltage at the grid of V9, which then conducts more current and causes C30 to charge to a higher voltage. Tube V9 conducts less for drifts in fre-

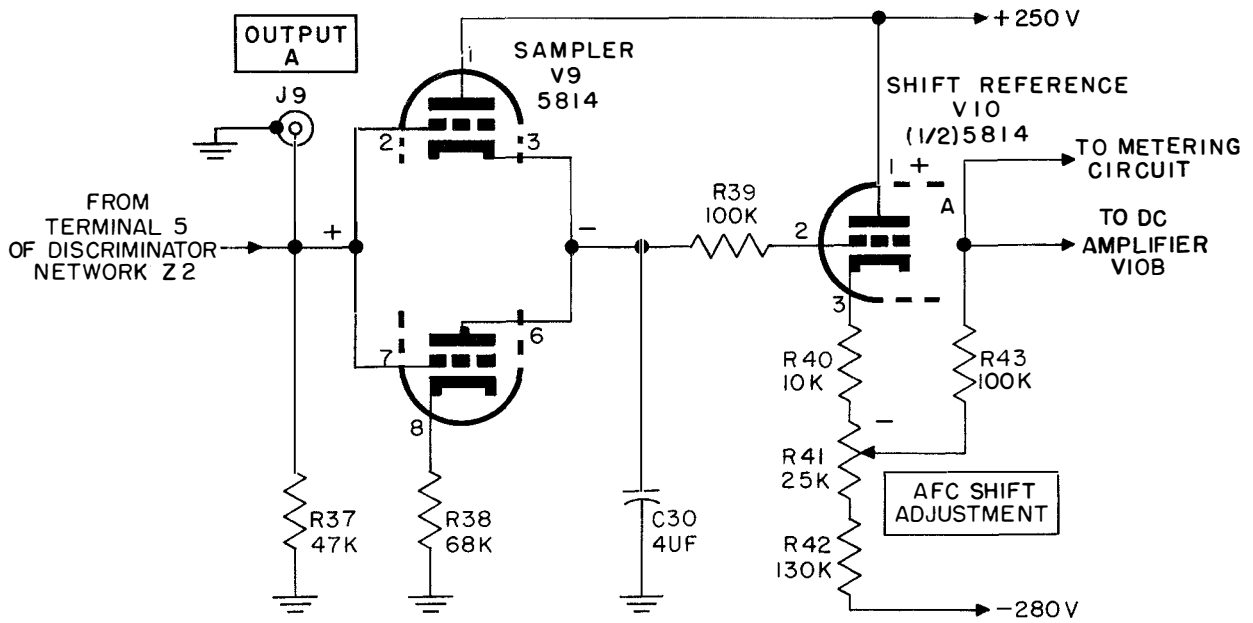

NOTES:
1. UNLESS OTHERWISE SPECIFIED, ALL CAPACITORS ARE IN UUF, ALL RESISTORS ARE IN OHMS.
2. POLARITIES SHOWN ARE THOSE WHICH RESULT FROM A POSITIVE FREQUENCY DRIFT.

TM2241-28

Figure 32. Sampler and shift reference stage, schematic diagram.

quency below the correct if. mark value. Capacitor C30, in this case, discharges to a lower voltage. Rapid frequency changes caused by normal mark-space keying do not affect the charge on C30 because of the large time constant involved in discharge. The charge on C30 is applied as signal voltage to the shift reference tube, V10. Thus, the sampler stage permits only long, general frequency drifts to appear as signal changes to the grid of the shift reference tube.

c. Each shift reference stage is essentially a cathode follower circuit utilizing one section of a dual triode, V10A in channel A and V36A in channel B. Referring to channel A, resistors R40 and R42 together with potentiometer R41 form the load resistance network. The slide arm of the AFC SHIFT ADJUSTMENT, R41, connects to the grid of the first dc amplifier, V10B, through grid limiting resistor R43. Potentiometer R41 is adjusted to apply a 0-volt potential to the grid of V10B when the mark frequency is correct. This balances the afc motor circuit and holds the oscillator on frequency during afc operation. A deviation in the charge on C30 resulting from a drift in mark frequency changes the signal to tube V10A and the voltage at the slide arm of potentiometer R41 will no longer be zero. An unbalanced condition then exists in the dc amplifier stages which actuate the oscillator-capacitor drive-motor B1. The direction of rotation is determined by the direction of frequency drift from the 50 kc center if. frequency. The motor rotates or tunes capacitor C8 until the oscillator brings the mark frequency back to its correct value. To maintain dc amplifier balance under normal operating conditions, adjustments for changes in frequency shift within the range of 150 to 1,000 cycles are made by means of the AFC SHIFT ADJUSTMENT control (R41).

46. Dc Amplifier Stages

(fig. 33)

a. In the dc amplifier stages, an error signal appearing at the slide arm of AFC SHIFT ADJUSTMENT potentiometer R41 is amplified and fed to the two grids of the motor drive tube as a push-pull output. Three dual triodes are used in the dc amplifier stages, V10B, V12, and V14 in channel A, and V36B, V38, and V39 in channel B. Each stage is a direct-coupled amplifier with resistive connections between stages. No blocking capacitors or coupling transformers are used. Except for reference symbols, the channel A and channel B dc amplifier stages are identical.

b. In channel A, the grid of first dc amplifier tube V10B is connected to potentiometer R41 through current-limiting resistor R43. Any error signal impressed on the grid of V10B is amplified. The cathode is grounded through resistor R44. Resistor R45 serves as the plate-load resistor. A voltage-dividing network is formed by R46 and R48 and potentiometer R47. The slide arm of potentiometer R47 is connected to the control grid (pin 2) of inverter tube V12 through current-limiting resistor R51.

c. The dual-triode inverter tube, V12, forms a differential amplifier having a single input terminal and two output terminals. An input error signal to V12A (from the first dc amplifier) is applied to grid 2; grid 7 of tube V12B remains fixed at ground potential. The signal is coupled to V12B by cathode resistor R53. The output voltage between the plates (pins 1 and 6) is the same as if the input voltage were applied in conventional push-pull. The push-pull nature of the inverter stage, acting as a differential amplifier, is shown by the curves of figure 34. By symmetry, the output voltage is zero at zero input voltage. Resistors R52 and R54 are the plate-load resistors, and R53 is the cathode resistor common to both triode sections. The two separate output voltages are fed from the plates through resistive networks to second dc amplifier V14. Resistors R58 and R59 and potentiometer R57 form a voltage divider across the output of V12A. Resistor R60 connects to the grid of V14B. Resistors R55 and R56 and potentiometer R57 form a similar voltage divider across the output of V12B. Resistor 61 connects to the grid of tube V14A.

d. The second dc amplifier, V14, provides additional amplification for each of the two outputs of inverter tube V12. Both cathodes are grounded to form two simple triode amplifiers. Tube V14A amplifies the signal from V12B, and V14B amplifies the signal from V12A. Plate-load resistor R64 forms a voltage divider with resistors R63 and R62. Plate-load resistor R65, for the A section of tube V14, forms a voltage divider with resistors R66 and R68. Amplified out-of-phase signals from the inverter are supplied to the motor drive circuit through grid current-limiting resistors R67 and R69.

e. To summarize the operation of motor drive circuit, a positive error voltage appearing at the

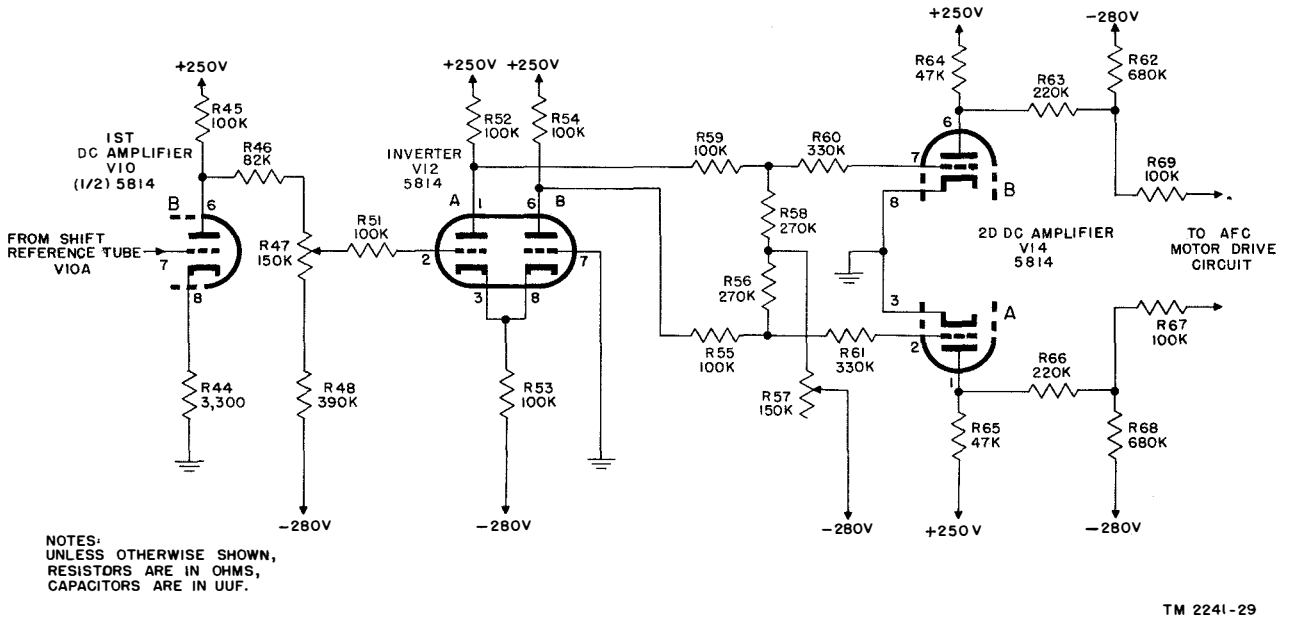

Figure 33. Dc amplifier stages, schematic diagram.

grid of cathode follower V10A is reflected through resistors R40, R41, and R43 and drives the grid of tube V10B more positive. In conducting more heavily, the plate voltage of tube V10B becomes lower. This lower voltage is applied to the control grid of tube V12A and is sufficient to cut off this section of the tube. The increased voltage at the plate (pin 1) is applied to the grid of tube V14B and causes it to conduct. Since the cathodes of tubes V12A and V12B are common, cutting off V12A makes the grounded grid of V12B become more positive with respect to its cathode and causes V12B to conduct. The resulting lowered voltage at the plate (pin 6) is applied through the voltage divider to the control grid (pin 2) of the tube V14A, cutting it off. With tube V14B conducting and tube V14A cut off, negative and positive signals are applied to tubes V15B and V15A. Motor B1 (par. 47) then operates to decrease the capacitance of C8; this reestablishes a correct converter if. of 50 kc. With no error signal present, the overall balance of the dc amplifier stages is obtained by means of channel A dc amplifier adjustments R47 and R57. Both potentiometers are accessible from the top of the chassis and may be adjusted with a screwdriver. Refer to figure 10 and paragraph 63*b*(2).

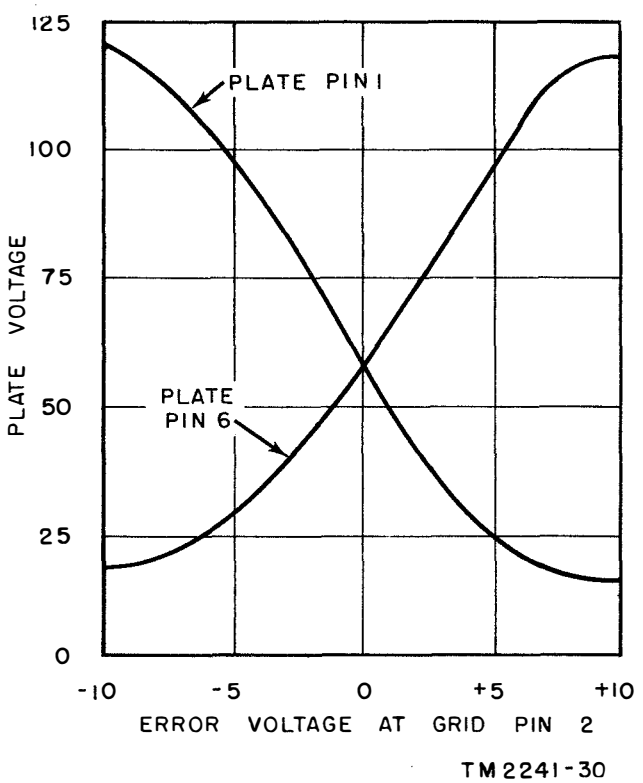

Figure 34. Inverter characteristic curves.

47. Motor and Motor Drive Circuit

(fig. 35)

a. The channel A afc circuit terminates in the motor drive stage which uses dual-triode tube V15 to control the direction and amount of rotation of motor B1. Motor B1 is coupled to oscillator tuning capacitor C8 through a gear train of ap-

proximately 4,500-to-1 ratio. Any rotation of B1 is observable on a *spinner* disk marked AFC INDICATOR on the front panel. A friction-clutch arrangement permits manual tuning of capacitor C8 by means of the DRIFT INDICATOR knob on the front panel. The friction clutch, gear train, motor B1, and tuning capacitor C8 are mounted in one replaceable inclosure, afc unit Z9. Also included in Z9 is cam operated switch S4 which closes the power circuit to warning bell I 1 when either extreme of the tuning capacitor range is reached. For channel B, afc motor-capacitor assembly Z10 is identical and is interchangeable with Z9. Tube V40, in the motor drive circuit, controls afc unit Z10.

b. Commonly called drag-cup motors, B1 and B2 are ac followup devices using the principle of the induction-disk watt-hour meter. An exploded pictorial diagram of a drag-cup motor is shown in figure 36. The rotor is very light, consisting of a nonmagnetic cup on a shaft. The cup rotates within a conventional distributed-pole two-phase stator and a fixed round lamination stack which is used to complete the magnetic circuit. The field windings set up eddy currents in the drag cup which react with the air gap flux to produce motor torque. One phase (winding CD) is excited continuously from the ac line through two parallel starting capacitors, C32 and C33, and the normally closed contacts of relay K1. Capacitors C32 and C33 are used to obtain a 90° phase shift for producing a two-phase rotating field from the single-phase ac line. The other phase (winding AB) is fed as a load in the cathode circuits of afc motor drive tube V15. With no error signal from the afc discriminator, the dc amplifiers are balanced and a cutoff bias of approximately −25 volts is applied to each grid of the motor drive tube. Any error signal caused by a drift in the if. will drive one grid of the motor drive tube more positive and the other more negative causing one triode section to draw current and the other to become completely deenergized. The current is rectified in passing through the triode section and is fed as 60 cps pulsating dc to phase winding AB of the drag-cup motor. When the mark signal drifts toward a frequency lower than the 50-kc center frequency, the motor turns as a result of this half-wave rectified ac. The direction of rotation depends on which triode section is conducting. Each triode section acts as a switch for changing the phase winding AB of B1 from one-

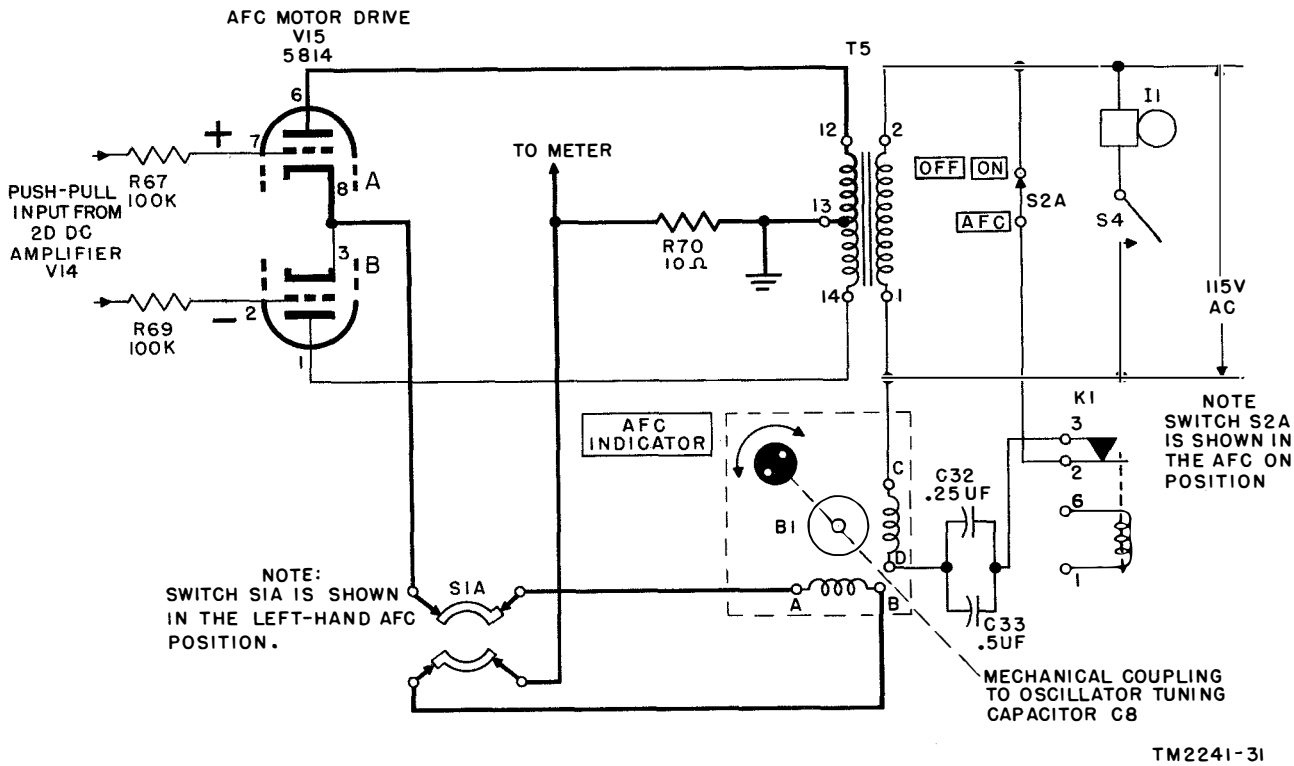

Figure 35. Motor and afc motor drive circuit, simplified schematic diagram.

half of center-tapped transformer T5 to the other. Reversal of the two-phase motor is accomplished by electronically reversing the phase of the current in winding AB.

c. When the mark frequency drifts away from the 50-kc center frequency in the direction of a higher frequency, the grid of V15A becomes more positive and the grid of V15B (fig. 35) more negative. This causes V15A to conduct, and the current passes through the top half of the secondary winding of T5, through R70 and phase winding AB of B1, and back to the cathode through switch S1A. Because of the phasing between the two windings of B1, the motor turns in such a direction as to cause an unmeshing of the plates of C8 resulting in a decrease in capacitance. The decrease in capacitance continues until the oscillator brings the if. back to 50 kc and the dc amplifiers again are balanced. When the mark signal drifts below 50 kc, the grid of V15B becomes more positive and tube V15A is cut off. Tube V15B conducts and current passes through the lower half of the secondary winding of T5. The phasing in phase winding AB is changed by 180° and the motor turns in the opposite direction, meshing the capacitor plates. This causes the oscillator frequency to decrease which, in turn, raises the mark signal frequency back to its original value. When the afc discriminator output is reversed by switch section S1B, section S1A of the same switch reverses phase winding AB and the operation of motor B1 is reversed. The current through motor winding AB may be measured by the metering circuit which connects across series resistor R70 when metering switch S11 is in position R57 (fig. 39).

d. Motor winding CD is excited continuously from the ac line through a set of normally closed contacts on relay K1. The K1 relay contacts open on weak or failing signals, thus disabling motor B1. This prevents B1 from detuning the oscillator on noise in its attempt to reduce the error signal to zero.

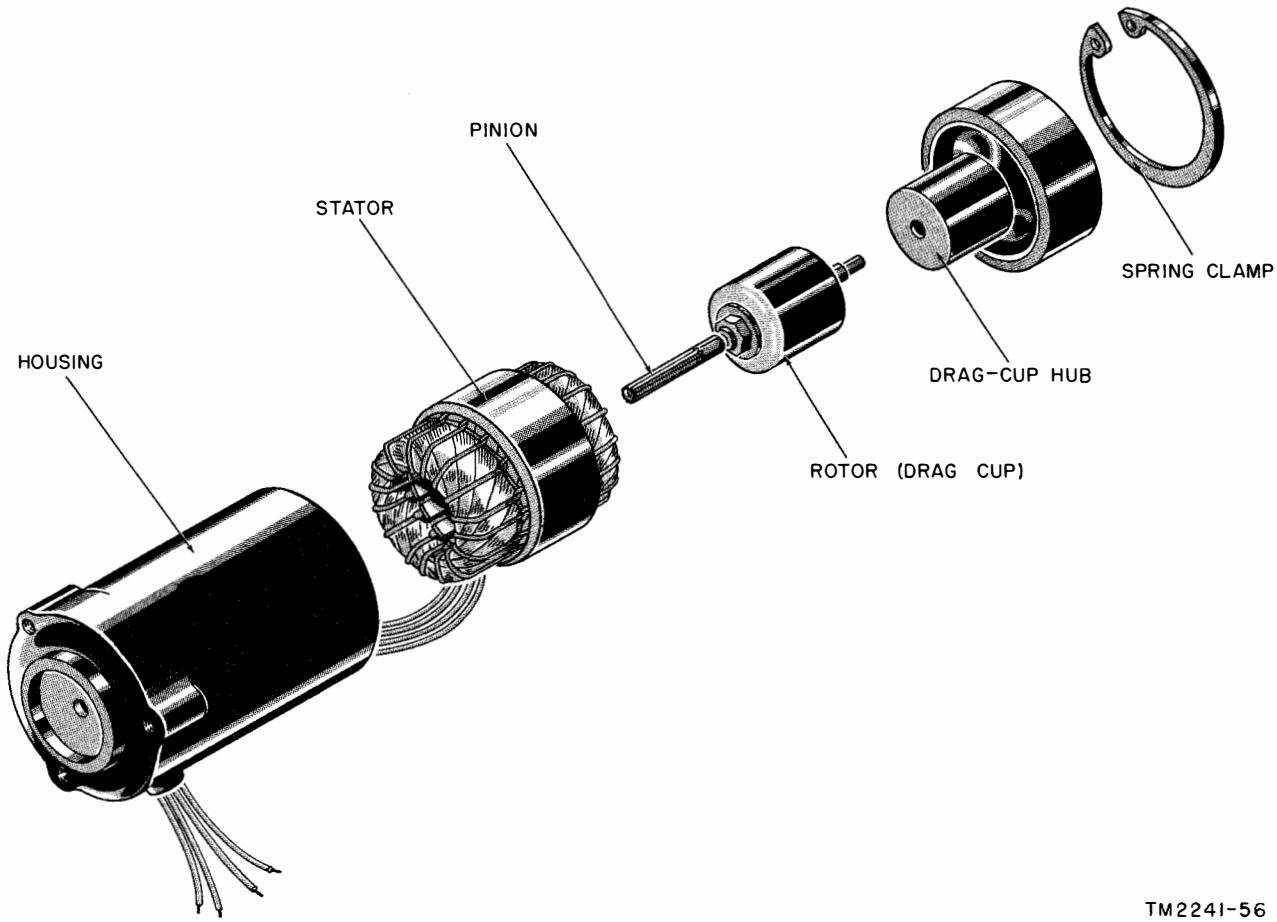

Figure 36. Exploded view of motor B1.

48. Threshold Control Circuit

(fig. 37)

a. The threshold control circuit holds a mark signal on the TY loop circuit and disables the afc motor if the incoming carrier fails. Each circuit consists of a signal rectifier tube and a threshold amplifier tube. Except for reference symbols, the threshold control circuits are the same for channel A and channel B.

b. In channel A, part of the if. signal at the plate of first afc limiting amplifier V4 is fed through coupling capacitor C20 to signal rectifier tube V11. Tube V11 is a twin diode with the cathode of diode A tied to the plate of diode B. The input signal from V4 is applied at this junction point. A −3 volt potential is applied to the plate (pin 7) of V11A through AFC THRESHOLD LEVEL potentiometer R50. Input signals to V11 more negative than −3 volts cause diode A to conduct. Current is rectified in passing through V11A and continues through R50 to the −3 volt line. Tube V11B, with its resistor-capacitor (C31–R49) return to ground, restores the circuit to equilibrium when tube V11A is not conducting.

c. The dc signal output from the signal rectifier is amplified by threshold amplifier tube V13. The level of the signal impressed on the grid of V13 is adjusted by AFC THRESHOLD LEVEL control R50. When V11 conducts on strong signals, the current through R50 drives the grid of tube V13 negative. This causes V13 to cut off and current decreases through relay K1 which is connected in the plate circuit. With the relay deenergized, movable contacts 2 and 3 close for afc motor circuit operation and contacts 4 and 5 open, ungrounding the mark-hold line. This condition is maintained as long as the carrier remains strong, and is removed automatically as soon as the carrier drops in strength.

d. Motor B1 is connected to the 115-volt power

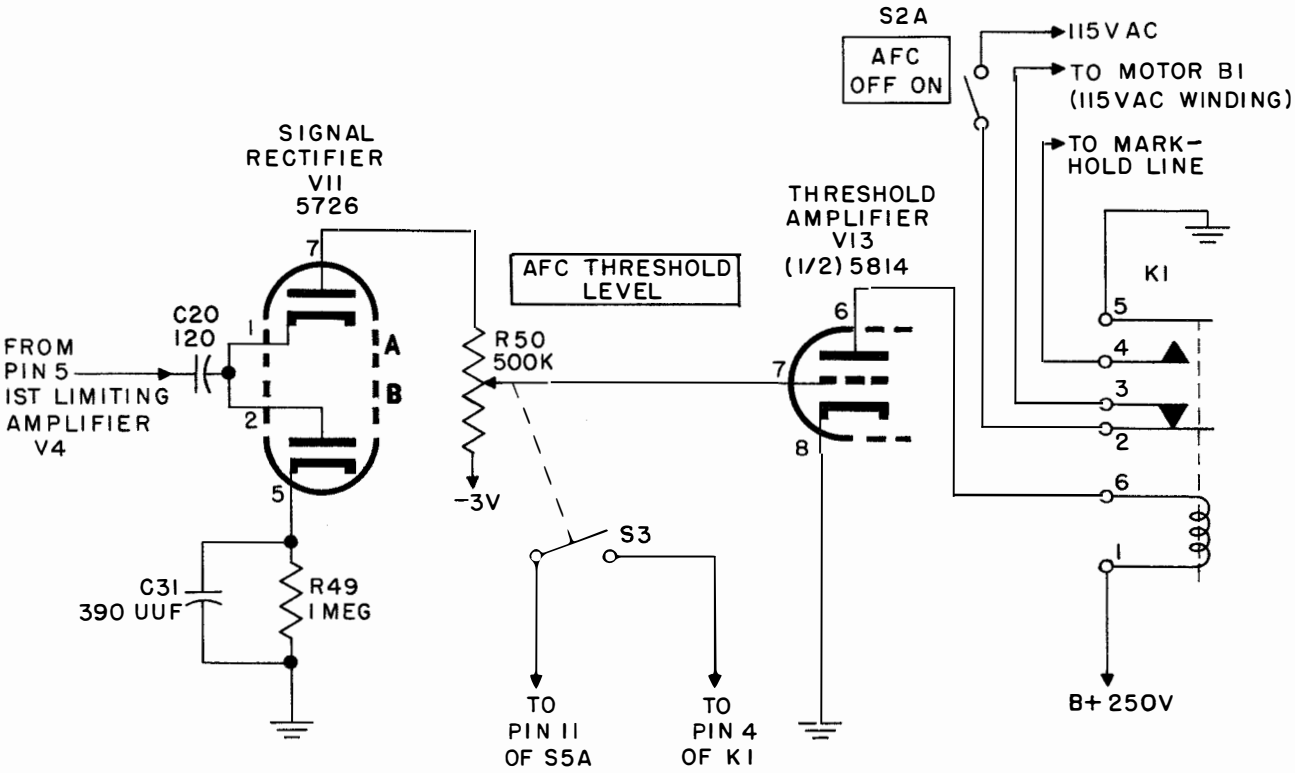

NOTE:
CONTACT 4 OF RELAY K1 CONNECTS TO MARK-HOLD LINE, THROUGH SWITCH S3, WHICH IS GANGED TO R50, AND THROUGH SWITCH S5A.

TM2241-33

Figure 37. Threshold control circuit, schematic diagram.

line through contact points 2 and 3 on relay K1 and afc switch S2A. Thus, the motor is disabled when switch S2A is in the OFF position or when relay K1 is energized due to a failing signal. With relay K1 energized (when the signal fails), normally open contact points 4 and 5 ground the markhold line through switch S3 and CHANNEL SELECTOR switch S5A.

49. Power Supply

The power supply circuit (fig. 38) supplies filament voltages and three high-voltage (hv) dc potentials for the operation of the converter.

a. Power Input Circuit. The 115-volt, 50- to 60-cycle primary power supply is connected by a cable assembly to receptacle J8 on the converter. The power leads then are connected through 3-ampere fuses F1 and F2 to filter Z8, through the contacts of toggle switch S9, to winding 1–2 of power transformer T5. Neon lamp I 2, in series with dropping resistor R181, is connected across primary winding 1–2 of T5 to indicate when the power circuit is energized.

b. Full-Wave Rectifiers for Positive 0.33- and 250-Volt Supplies. Rectifier tubes V42, V43, and V44 with filament windings 3–4–5 and hv windings 12–13–14 of transformer T5, provide a +250-volt dc supply. This supply is filtered by series choke coils L3 and L4 and capacitors C88, C89A, and C89B. Resistor R191 serves as a peak current-limiting resistor. Bleeder resistors R194 and R195 are connected across the output terminals of the +250-volt supply to stabilize the voltage and to discharge the filter capacitors when the converter is turned off. A voltage divider consisting of resistors R192 and R193 provides a potential at their junction of +0.33 volt required to measure B+ in the metering circuit.

c. Full-Wave Rectifier for Negative 280-, 35-, 8-, 3-, and 0.37-Volt Supplies. Rectifier V41, filament windings 3–4–5, and hv windings 6–7–8 of transformer T5, are connected in an inverted full-wave rectifier circuit to provide five negative supplies: a −280 volt supply for the keyer and dc amplifier circuits, a negative 35-, 8-, and 0.37-volt supply for the metering circuits, and a −3 volt supply for tube biasing. The output of tube V41 is filtered by resistors R182 and R183 and capacitors C87A and C87B. Resistors R184 through R190 serve both as a voltage-dividing network to tap off the various negative potentials required by the converter and as a bleeder network.

d. Full-Wave Rectifier for Positive 130-Volt Dc Loop Supply. Rectifier V45, filament windings 3–4–5, and hv windings 9–10–11 of transformer T5, are connected in a full-wave rectifier circuit to provide approximately +100 volts supply for the TY loop supply, depending on the printer load. Filtering is accomplished by series choke coil L5 and capacitors C90A and C90B. Resistor R196 acts as a bleeder resistor for stabilizing the output voltage.

50. Metering Circuits

(fig. 39)

The frequency-shift converter is provided with microammeters M1, M2, M3, and M4 for checking the operation of the various circuits. Meters M1 and M2, connected permanently across pins 2 and 7 of limiter diodes V6 and V32, indicate the input levels of signals at the two converter input terminals. Meter M3 is connected permanently across terminals 7 and 8 of discriminator transformer Z7. This meter measures the channel B discriminator output voltage. Meter M4 is connected to terminals 2 and 5 on PRESS TO TEST switch S10. Normally, M4 measures the channel A discriminator output voltage. When switch S10 is depressed, meter M4 is connected to switch S11 for metering various voltages throughout the converter during alinement and adjustments. Switch S11 has 12 positions, 3 of which are unused (fig. 39).

a. R109 Position. In position 1, meter M4 is connected in series with multiplier R199 across meter shunt R106. The meter indicates the loop current through mark-keyer tubes V25 and V26.

b. R94 Position. In position 10, meter M4 indicates the voltage at the grid of keyer amplifier tube V24A. In series with multiplier R200, meter M4 connects to the slide arm of potentiometer R94 and to the −8 volt tap in the power supply. With R94 properly adjusted for −8 volts at the grid of V24A, meter M4 reads 0, indicating a balance against the −8 volts at the power supply. Section A of S11 grounds the input to the keyer amplifier, grid 7 of V23A.

c. R99 Position. In position 11, meter M4 measures the voltage at the grid of space-keyer tube V24B. The meter, in series with multiplier R198, connects from the slide arm of potentiometer R99 to ground. Section A of S11 grounds the input to the keyer amplifier, grid 7 of V23A.

d. R104 Position. In position 12, meter M4

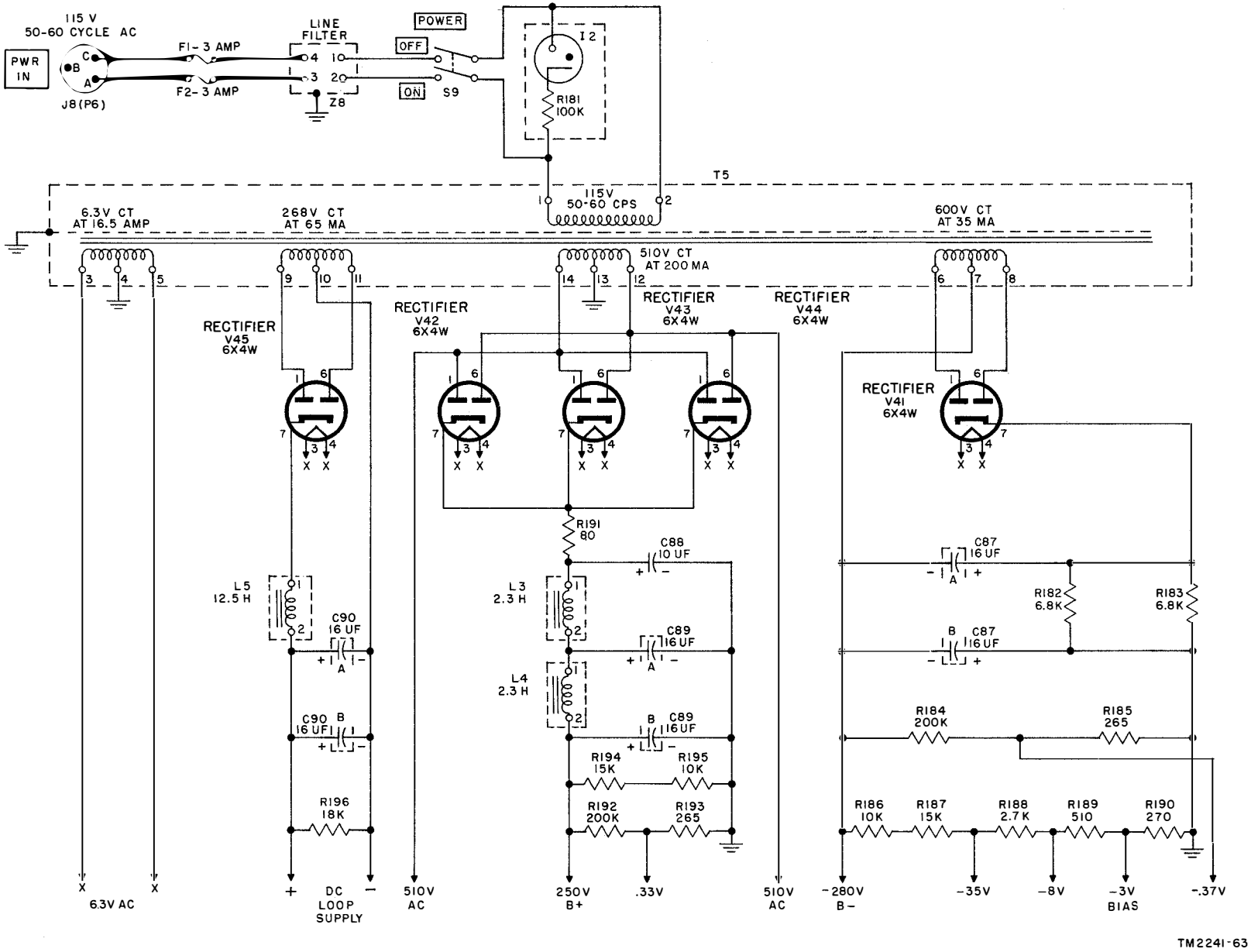

Figure 38. Power supply, schematic diagram.

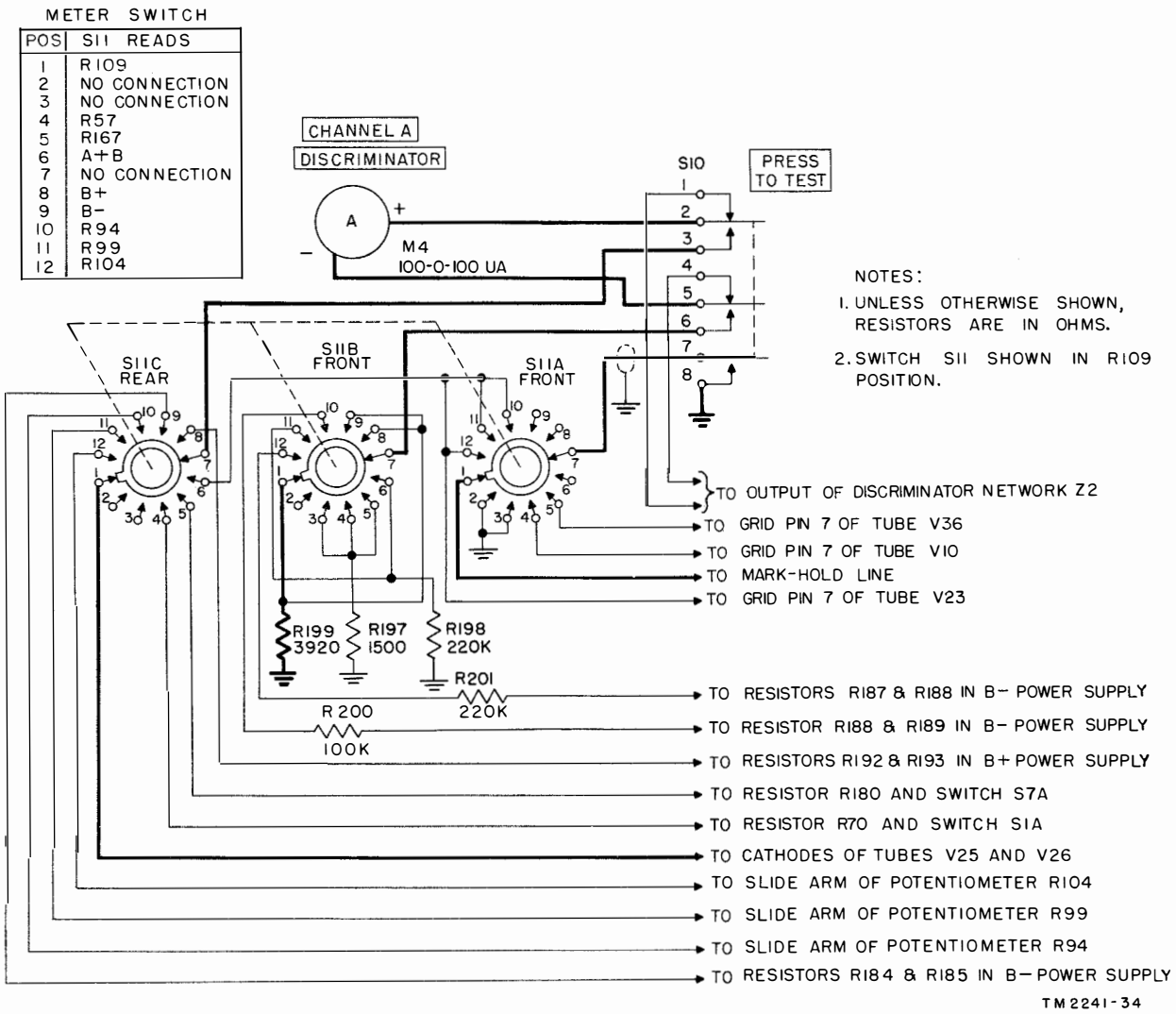

Figure 39. Metering circuit, schematic diagram.

measures the voltage at the grids of mark-keyer tubes V25 and V26. The meter, in series with multiplier R201, connects to the slide arm of potentiometer R104 and to the −35 volt tap in the power supply. With R104 properly adjusted for −35 volts at the grids of V25 and V26, meter M4 reads 0, indicating a balance against the −35 volts at the power supply.

e. B− Position. In position 9, meter M4 is connected in series with multiplier R199 to measure the voltage across B− power-supply resistor R185. When the B− power supply is at −280 volts, a −0.37 volt drop is produced across R185 by the current flowing through it. This causes a −94 deflection on M4 which, when multiplied by 3, indicates a voltage of approximately −280.

f. B+ Position. In position 8, meter M4 is connected in series with multiplier R199 to measure the voltage across B+ power-supply resistor R193. A B+ power-supply output of 250 volts will cause M4 to deflect to +84 or approximately 250 volts.

g. A+B Position. In position 6, meter M4 is connected across the output of Z5 through multiplier R198. It indicates the combined output voltage of both diversity discriminators.

h. R167 Position. In position 5, meter M4 is connected across R180 and through multiplier R197. The meter indicates the current through one-phase winding of afc motor B2.

i. R57 Position. In position 4, meter M4 is connected across R70 and through multiplier R197. The meter indicates the current through one-phase winding of afc motor B1.

CHAPTER 6

FIELD MAINTENANCE

Note. This chapter contains information for field maintenance. The amount of repair that can be performed by units having field maintenance responsibility is limited only by the tools and equipment available and by the skill of the repairman.

Section I. TROUBLESHOOTING AT FIELD MAINTENANCE LEVEL

51. Troubleshooting Procedures

a. General. The first step in servicing a defective piece of electronic equipment is to localize the fault. Localization means tracing the fault to the major circuit responsible for the abnormal operation of the set. The second step is to isolate the fault. Isolation means tracing the fault to the defective part responsible for the abnormal condition. Some faults, such as burned-out resistors or capacitors and shorted transformers, often can be located by sight, smell, and hearing. The majority of faults, however, must be isolated by *checking voltages and resistances.*

b. Voltage and Resistance Measurements, Differences in Sets. The tube socket resistance and voltage measurement chart (fig. 42) applies to all converter units except those with serial numbers from 1 to 200. For these, the following resistances and voltages apply:

Voltages and Resistance Measurements, Differences in Sets

Tube and pin No.	Voltage and/or resistance
V4, pin 2	3.4V.
V4, pin 5	120K and 30V.
V4, pin 6	85K and 170V.
V4, pin 7	3.4V.
V16, pin 2	3V.
V16, pin 5	115K and 30V.
V16, pin 6	85K and 165V.
V16, pin 7	3V.
V17, pin 2	3V.
V17, pin 5	115K and 30V.
V17, pin 6	85K and 165V.
V17, pin 7	3V.
V30, pin 2	3.4V.
V30, pin 5	120K and 30V.
V30, pin 6	85K and 170V.
V30, pin 7	3.4V.

c. Tests. The tests listed below aid in isolating the source of trouble. To be effective, the procedure should be followed in the order given. Remember that servicing should cause no further damage to the equipment. First, trouble should be localized to a single stage or circuit. Then the trouble may be isolated within that stage or circuit by appropriate voltage, resistance, and continuity measurements. The service procedure is summarized as follows:

(1) *Visual inspection.* The purpose of visual inspection is to locate any visible trouble such as loose, broken, or charred parts. Through this inspection alone, the repairman frequently may discover the trouble or determine the stage in which the trouble exists. This inspection is valuable in avoiding additional damage to the equipment which might occur through improper servicing methods and in forestalling future failures.

(2) *Power supply resistance measurements.* These measurements (par. 55) prevent further damage to the equipment from possible short circuits. Since this test gives an indication of the condition of the filter circuits, its function is more than preventive.

(3) *Troubleshooting chart* (fig. 40). The trouble symptoms listed in this chart will aid greatly in localizing trouble.

(4) *Operational test.* The operational test (par. 57) is important because it frequently indicates the general location of trouble. In many instances, the information gained will determine the exact nature of the fault. In order to utilize

this information fully, all symptoms must be interpreted in relation to one another.

(5) *Intermittents.* In all these tests, the possibility of intermittents should not be overlooked. If present, this type of trouble often may be made to appear by tapping or jarring the set. It is possible that the trouble is not in the converter itself but in the installation (cabling to receivers, power cables, or teletypewriter connection), or the trouble may be caused by external conditions. In this event, test the installation, if possible.

52. Troubleshooting Data

Take advantage of the material supplied in this manual. It will help in the rapid location of faults. Consult the following troubleshooting data.

Fig.	Par.	Description
40		Troubleshooting chart.
41		Frequency Shift Converter CV–116/URR, tube location.
42		Tube socket resistance and voltage measurements, converter units serial numbers 201 up.
43		Resistor and capacitor board voltages and resistances.
51		Circuit for measuring relay current.
52		Adjusting relay K1 or K2.
62		Frequency Shift Converter CV–116/URR, serial numbers 1–200, schematic diagram.
63		Frequency Shift Converter CV–116/URR, serial numbers 201 and higher, schematic diagram.
64		Cabling diagram, Frequency Shift Converter, CV–116/URR.
	54	Dc resistances of transformers and coils.
	55	Checking B+ circuits for shorts.
	57	Operational test procedures.
	59	Relay adjustments.
	61 through 63	Alinement procedures.

53. Test Equipment Required for Field Maintenance

The test equipment recommended for troubleshooting Frequency Shift Converter CV–116/URR is listed below. The technical manuals associated with the test equipment also are listed.

Test equipment	Technical Manual
Multimeter TS–352/U	TM 11–5527
Electronic Multimeter TS–505/U	TM 11–5511
Electron Tube Test Set TV-7/U	TM 11–5083
RF Signal Generator Set AN/URM–25	TM 11–5551
Frequency Meter Set SCR–211–( )	TM 11–300

54. Dc Resistances of Transformers and Coils

The dc resistances of the transformer windings and the coils in the converter are listed below:

Caution: Do not attempt to make resistance measurements with the power on.

Transformer or coil	Terminals	Ohms
T1	1–2	0.25*
	3–4	4.9 aprx
T2	1–2	0.25*
	3–4	4.9 aprx
T3	1–2	0.25*
	3–4	4.9 aprx
T4	1–2	0.25*
	3–4	4.9 aprx
T5	1–2	0.7
	3–4	0.1*
	4–5	0.1*
	6–7	150
	7–8	150
	9–10	13
	10–11	13
	12–13	28
	13–14	28
Z1	1–2	5.2
	3–4	5.3
Z2	1–2	4.7
	3–4	4.5
	3 or 4–9	2.2
	5–6	202K
	7–8	2,000
Z3	1–2	4.7
	3–4	4.5
	3 or 4–9	2.2
	5–6	202K
	7–8	2,000
Z4	1–4	17
	3–4	16
	3 or 4–9	8
	5–6	202K
	7–8	2,000
Z5	1–3	15K
	1–2	infinite
	2–3	infinite
	4–6	10K
	4–5	infinite
	5–6	infinite
Z6	1–2	17.7
	3–4	17.5

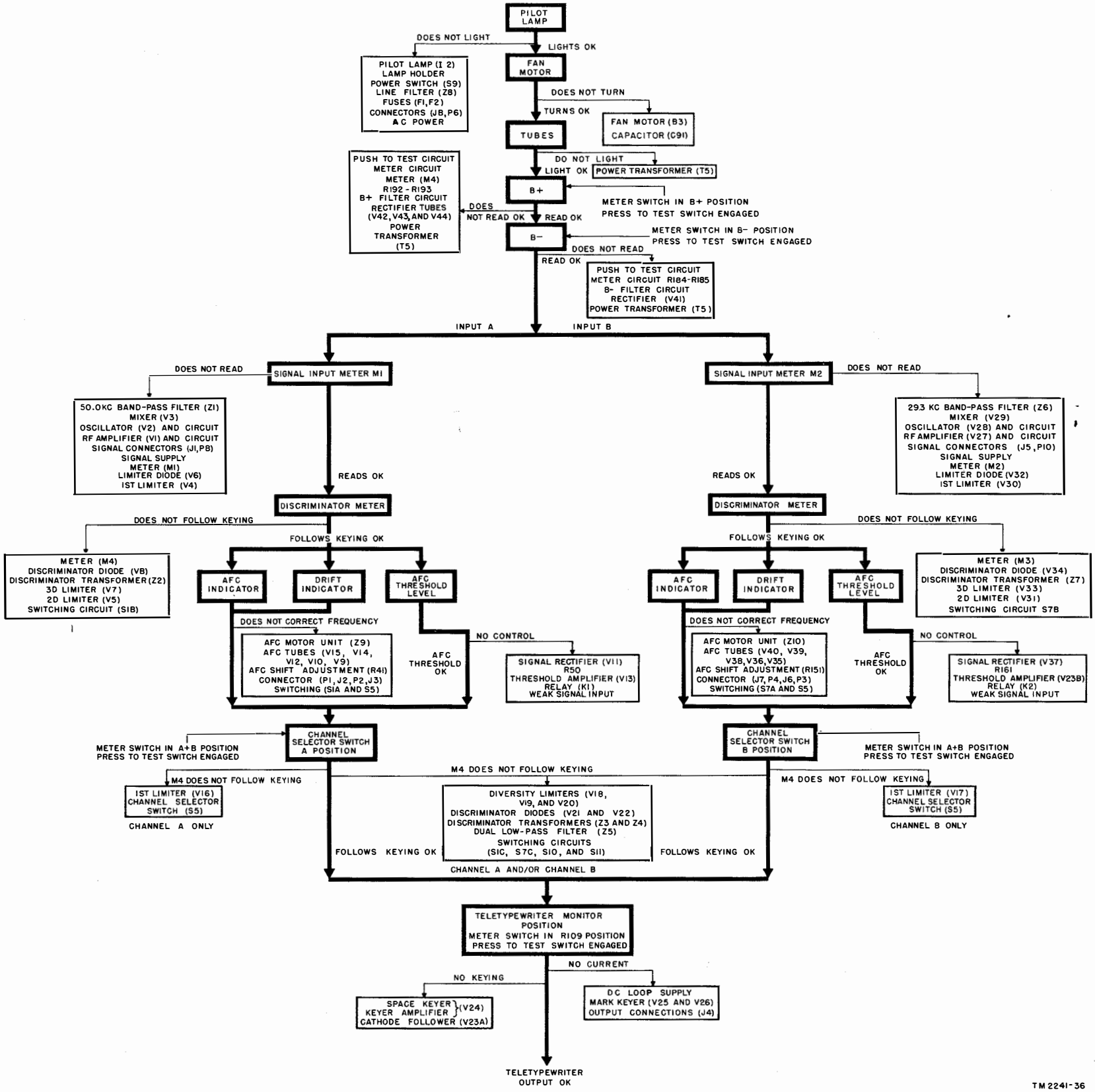

Figure 40. Troubleshooting chart.

Transformer or coil	Terminals	Ohms
Z7	1–2	17
	3–4	16
	3 or 4–9	8
	5–6	202K
	7–8	2,000
Z8	1–4	0.5*
	2–3	0.5*
K1	1–6	10K
K2	1–6	10K
B1	A–B	1,500
	C–D	1,500
B2	A–B	1,500
	C–D	1,500
B3	Green-red	330
	White-blue	410
L1	3–4	2
L2	3–4	2
L3		61
L4		61
L5		154

*Resistance negligible, 0.5 ohm or less. These values will give an indication of 0 ohms when measured by Multimeter TS-352/U.

55. Checking B+ Circuits for Shorts

a. Trouble within the converter often may be detected by checking the resistance of the hv circuits to ground before applying power to the equipment, thus preventing damage to the power supply. Check for the following resistance readings before attempting to operate the unit, leave the power cable disconnected while taking the measurements.

(1) From B+ to ground, the resistance should be 16K regardless of the position of the front panel switches. Measure between the red lead terminal of C89B and chassis ground (fig. 46).

(2) In the negative power supply, the resistance should be 18K regardless of the positions of the front panel switches. Measure between the white lead terminal of C87B and chassis ground (fig. 46).

(3) From pin D on J4 to pin 5 on V25 (loop power supply), the resistance should be 18K regardless of the positions of the front panel switches.

(4) From B− (white lead of C87B) to pin 1 of V41 (winding 6–7 of T5), the resistance should be 150 ohms.

(5) From B− (white lead of C87B) to pin 6 of V41 (winding 7–8 of T5), the resistance should be 150 ohms.

(6) From ground to pin 1 of V42 (winding 13–14 of T5), the resistance should be 28 ohms.

(7) From ground to pin 6 of V42 (winding 12–13 of T5), the resistance should be 28 ohms.

b. If the measured resistances differ materially from the values listed, first check the filter capacitors associated with the particular supply. Then look in the associated circuits for leaky or shorted capacitors, or for resistors that have changed values.

56. Troubleshooting Chart

The chart (fig. 40) is supplied as an aid in locating trouble in the converter. This chart lists the visual symptoms which the repairman observes while making a few simple tests. *The chart also indicates how to localize trouble quickly to the input, diversity, afc, or power-supply sections of the converter.* Once the trouble has been localized to a stage or circuit, a tube-check, and voltage and resistance measurements of this stage or circuit ordinarily should be sufficient to isolate the defective part. Normal voltage and resistance measurements are given in figures 42 and 43.

57. Operational Test Procedures

a. General. With the converter divorced from the teletypewriter system, troubleshooting can be performed with a minimum of equipment and parts. In addition to the equipment shown in figure 44, Frequency Meter Set SCR-211 is required.

b. Components and Connections Required. Connect RF Signal Generator Set AN/URM-25 to INPUT A or INPUT B as shown in figure 44Ⓐ or Ⓑ. Connect a 500-ohm, 2-watt resistor to J4 as shown in figure 44Ⓒ. This resistor replaces the output loop so that the converter may be operated under simulated operating conditions. The signal generator should be set to the frequency normally fed to input jacks J1 and J5 by the radio receivers used with the converter in actual operation. Resistance and voltage measurements require an electronic multimeter such as Electronic Multimeter TS-505/U.

c. Power-Supply Check. The satisfactory operation of the converter depends upon the proper voltages being applied to the various tube elements. These voltages may be checked regularly by observing the rectified output voltages of the power supply.

(1) To check the output voltages of the power supply, turn the metering switch knob successively to the positions indicated, depressing the PRESS TO TEST switch, and see that the readings are within the limits shown in the chart below.

Metering switch position	Meter M4 reading (E)	Actual reading
B−	93±5	3×E or 280±14 volts
B+	83±4	3×E or 250±12 volts

(2) If these readings are not obtained, measure to see that the converter input voltage is 115 volts ac ±10 percent. If it is, see figure 40 and check the circuit elements listed under "B+" and "B−", "Does Not Read O. K."

d. Input Circuits. The locations of screwdriver controls T1 and T2 involved in the procedures which follow are shown in figure 45.

(1) Connect the signal generator to INPUT A connector J1 of the converter, and set the signal generator frequency to a value corresponding to that of the if. input from the radio receivers. Set the input at 5,000 microvolts. This voltage requirement is based on the use of a signal generator of low output impedance. Do not connect an input to INPUT B connector J5 while making tests on channel A.

(2) Connect the electronic multimeter from pin 7 of tube V3 to ground, and adjust the tuning slugs in transformers T1 and T2 for maximum indication on the multimeter (set up to indicate ac voltage). If the multimeter reading fails to indicate a maximum peak of approximately 1.5 volts ac, test the tube and check the associated circuit elements. Misalinement of this stage will cause reduced output to the mixer and low readings on M1.

Note. At each step, it is assumed that all previous steps were completed satisfactorily. Isolate and clear any trouble located before proceeding with any succeeding steps.

(3) Rotate channel A AFC-XTAL-MARK HOLD switch S1 to the XTAL position and CHANNEL SELECTOR switch S5 to position A. Connect the electronic multimeter from pin 2 of tube V2 to ground and observe the reading on the multimeter (−7 volts dc). If the multimeter fails to give an indication, test tube V2 and check the associated circuit elements. Meter M1 also should give an indication. If it does not, tube V4, V5, or V6, meter M1, or the associated circuit elements is probably defective.

(4) Rotate channel A AFC-XTAL-MARK HOLD switch S1 to the AFC position. With the electronic multimeter still connected as described in (3) above, the multimeter still should indicate −7 volts dc. If the multimeter fails to give an indication, check coil L1 and sections D and E of switch S1.

(5) Transfer the signal generator from INPUT A to INPUT B. Repeat the steps outlined in (1) through (4) above for the channel B input circuits.

(6) Connect the electronic multimeter from pin 1 of V4 to ground to check the overall operation of the rf section. Tune the signal generator from approximately 10 kc below to 10 kc above the INPUT A frequency. The multimeter should indicate a definite peak voltage at the INPUT A frequency. If the multimeter fails to indicate a peak reading, check tube V3 and its associated circuit elements.

e. Afc Limiting Amplifiers. After checking the rf input circuits according to the procedure above, check the afc limiting amplifiers in accordance with the following:

(1) Connect the signal generator to INPUT A and adjust its frequency to the if. of the receiver normally used in conjunction with this converter. Connect the electronic multimeter from pin 5 or V7 to ground.

(2) Vary the output level of the signal generator from 50 to 100,000 microvolts. The multimeter should indicate a relatively constant reading of approximately 50 volts ac over the entire range of input level. Check tubes V4, V5, V6, and V7 and their associated circuit elements if abnormal readings are indicated on the multimeter.

(3) Transfer the signal generator from INPUT A to INPUT B. Repeat the steps outlined in (1) and (2) above for the channel B afc limiting amplifiers.

f. Afc Discriminator Circuits. The locations of the connection points involved in the following procedures are shown in figures 9 and 42.

(1) Connect the signal generator to INPUT A. Set the signal generator to the operating frequency and adjust its output to 10,000 microvolts. Connect the electronic multimeter across the + and − terminals of meter M4. Throw the AFC switch to the OFF position.

(2) The multimeter should read zero, indicating correct discriminator tuning. If a zero reading is not obtained, change the input signal frequency slightly.

(3) Disconnect the signal generator from the INPUT A jack. The object now is to decrease the frequency of the signal generator by 1 kc to simulate a spacing signal. To do this accurately, tune Frequency Meter SCR–211 to the operating frequency as described in TM 11–300. Couple the signal generator to the frequency meter. Zero-beat the frequency meter to the signal generator. Reduce the frequency of the frequency meter by 1 kc and zero beat the signal generator to the frequency meter. Uncouple the frequency meter and again connect the signal generator to the INPUT A jack. The multimeter now should indicate a negative 30±5 volts dc.

(4) Now increase the frequency of the frequency meter by 2 kc (1 kc above the operating frequency) and zero-beat the signal generator to the frequency meter as described in (3) above. Uncouple the frequency meter from the signal generator and connect the latter to the INPUT A jack. The multimeter now should indicate a positive 30±5 volts dc. If the conventional discriminator response described herein and in (3) above is not obtained, check V8, Z2, S1B, and the associated circuit wiring.

(5) Transfer the output of the signal generator from INPUT A to INPUT B. Repeat the steps outlined in (1) through (4) above for the channel B afc discriminator circuit.

g. Dc Amplifier Stages and Motor Drive Circuit. The locations of the controls involved in the following procedures are shown in figures 8 and 9.

(1) Throw the afc switch to the OFF position.

(2) Connect the signal generator to INPUT A. Set the signal generator to obtain a zero reading on M4 and adjust its output to 5,000 microvolts.

(3) Throw the afc switch to the ON position and adjust the channel A AFC SHIFT ADJUSTMENT control to stop the channel A AFC INDICATOR. At this point, meter M4 should indicate approximately +15 microamperes. If this reading is not obtained, see (5) below.

(4) Gradually decrease the frequency of the applied signal by several hundred cycles. The channel A AFC INDICATOR should spin in one direction. Gradually increase the frequency of the applied signal by several hundred cycles. The channel A AFC INDICATOR now should spin in the opposite direction.

(5) If the procedure above fails to give the indicated results, check the settings of potentiometers R47 and R57 as described in paragraph 63. If the operation is still not normal after adjusting R47 and R57, check tubes V9, V10, V12, V14, and V15, afc unit Z9, and associated circuit elements.

(6) Transfer the output from the signal generator to INPUT B. Repeat the steps outlined in (1) through (5) above, for the corresponding circuits in channel B.

h. Diversity Limiting Amplifiers.

(1) Connect the signal generator to INPUT A and adjust its output to the operating frequency. Connect the electronic multimeter from pin 5 of V20 to ground.

Rotate the CHANNEL SELECTOR switch to position A.

(2) Vary the output level of the signal generator from 50 to 100,000 microvolts. The multimeter should indicate a relatively constant reading of approximately 50 volts ac over the entire range of input levels. If abnormal readings are indicated on the multimeter, check tubes V16, V18, V19, and V20, and their associated circuit elements.

(3) Rotate the CHANNEL SELECTOR switch to the A + B position. Repeat procedure in (2)above. Check section B of switch S5 if normal readings are not obtained on the multimeter.

(4) Rotate the CHANNEL SELECTOR switch to position B. Repeat procedure in (2) above. With the procedure in (1) through (3) above completed satisfactorily, the most likely cause for abnormal multimeter readings in this procedure will be tube V17, section B of switch S5, or their associated circuit elements.

i. Diversity Discriminators.

(1) The following procedure requires one signal generator. Connect the output to the INPUT A and INPUT B jacks. Adjust the signal generator to the if. output of the receivers which normally are used, and set the output level at 10,000 microvolts. Connect the electronic multimeter

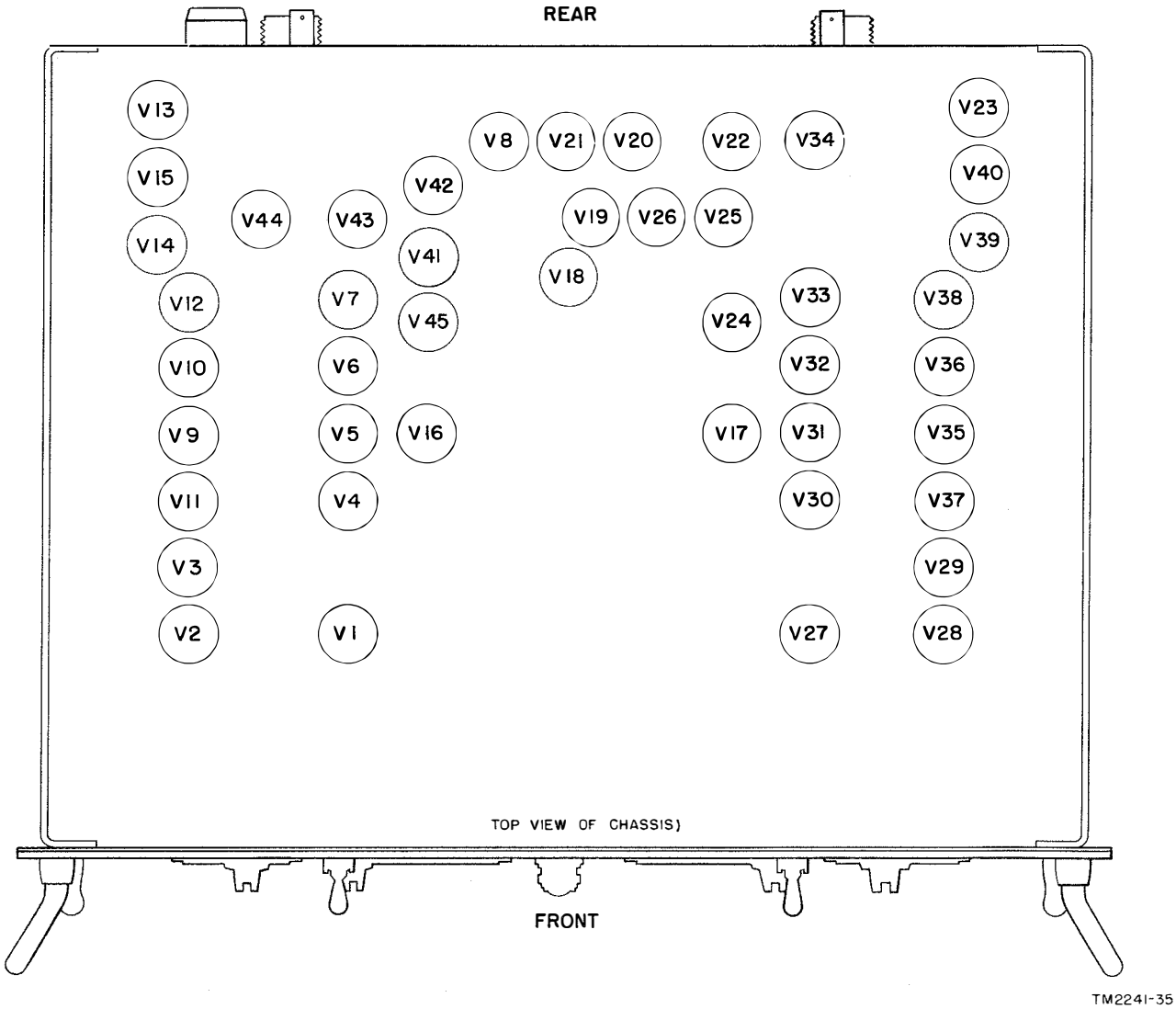

Figure 41. Frequency Shift Converter CV-116/URR, tube location.

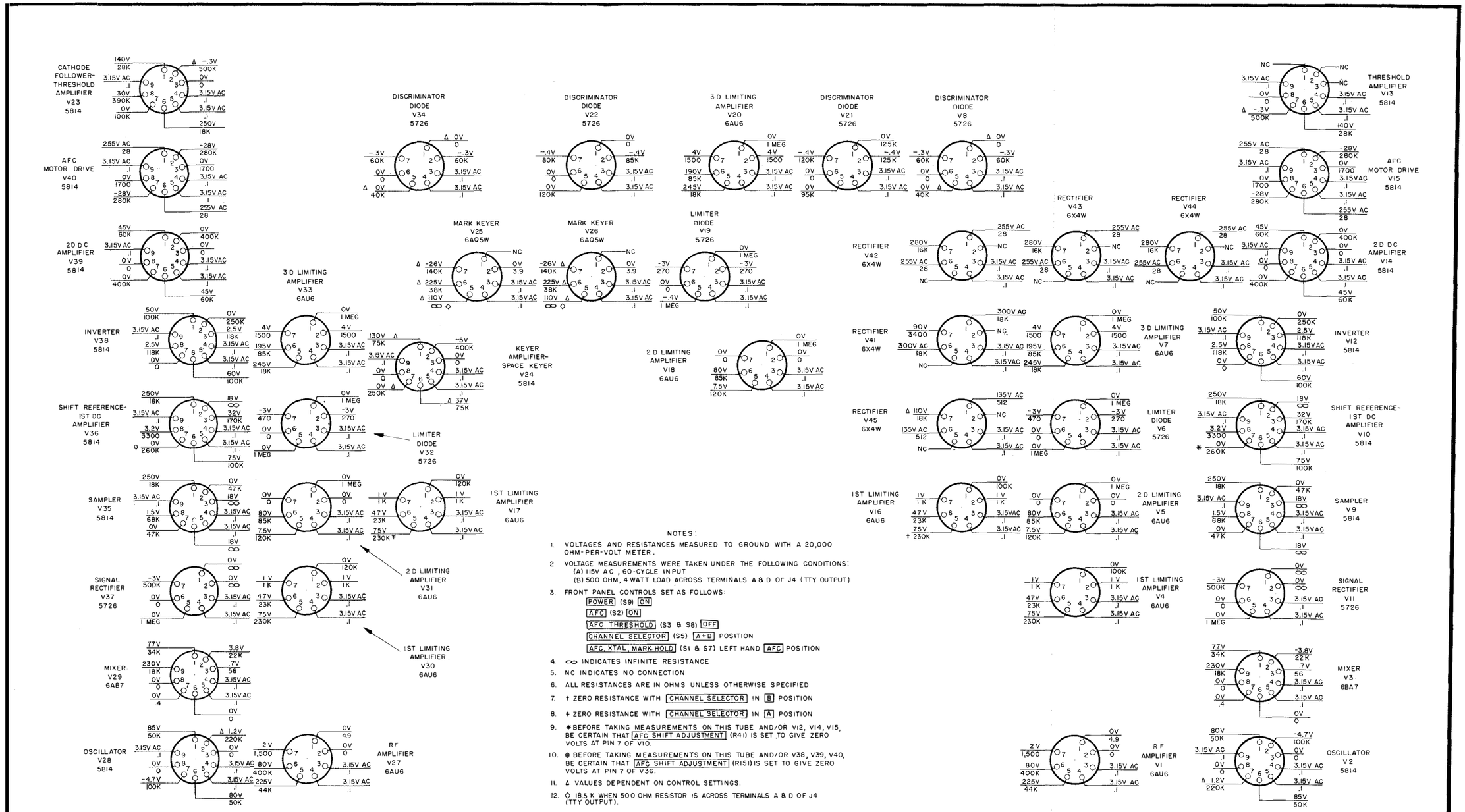

NOTES:

1. VOLTAGES AND RESISTANCES MEASURED TO GROUND WITH A 20,000 OHM-PER-VOLT METER.
2. VOLTAGE MEASUREMENTS WERE TAKEN UNDER THE FOLLOWING CONDITIONS:
   (A) 115V AC, 60-CYCLE INPUT
   (B) 500 OHM, 4 WATT LOAD ACROSS TERMINALS A & D OF J4 (TTY OUTPUT)
3. FRONT PANEL CONTROLS SET AS FOLLOWS:
   POWER (S9) ON
   AFC (S2) ON
   AFC THRESHOLD (S3 & S8) OFF
   CHANNEL SELECTOR (S5) A+B POSITION
   AFC, XTAL, MARK HOLD (S1 & S7) LEFT HAND AFC POSITION
4. ∞ INDICATES INFINITE RESISTANCE
5. NC INDICATES NO CONNECTION
6. ALL RESISTANCES ARE IN OHMS UNLESS OTHERWISE SPECIFIED
7. † ZERO RESISTANCE WITH CHANNEL SELECTOR IN B POSITION
8. ‡ ZERO RESISTANCE WITH CHANNEL SELECTOR IN A POSITION
9. * BEFORE TAKING MEASUREMENTS ON THIS TUBE AND/OR V12, V14, V15, BE CERTAIN THAT AFC SHIFT ADJUSTMENT (R41) IS SET TO GIVE ZERO VOLTS AT PIN 7 OF V10.
10. ⊕ BEFORE TAKING MEASUREMENTS ON THIS TUBE AND/OR V38, V39, V40, BE CERTAIN THAT AFC SHIFT ADJUSTMENT (R151) IS SET TO GIVE ZERO VOLTS AT PIN 7 OF V36.
11. Δ VALUES DEPENDENT ON CONTROL SETTINGS.
12. ◇ 18.5 K WHEN 500 OHM RESISTOR IS ACROSS TERMINALS A & D OF J4 (TTY OUTPUT).

Figure 42. Tube socket resistance and voltage measurements for converter units, serial numbers 201 up.

TM2241-37

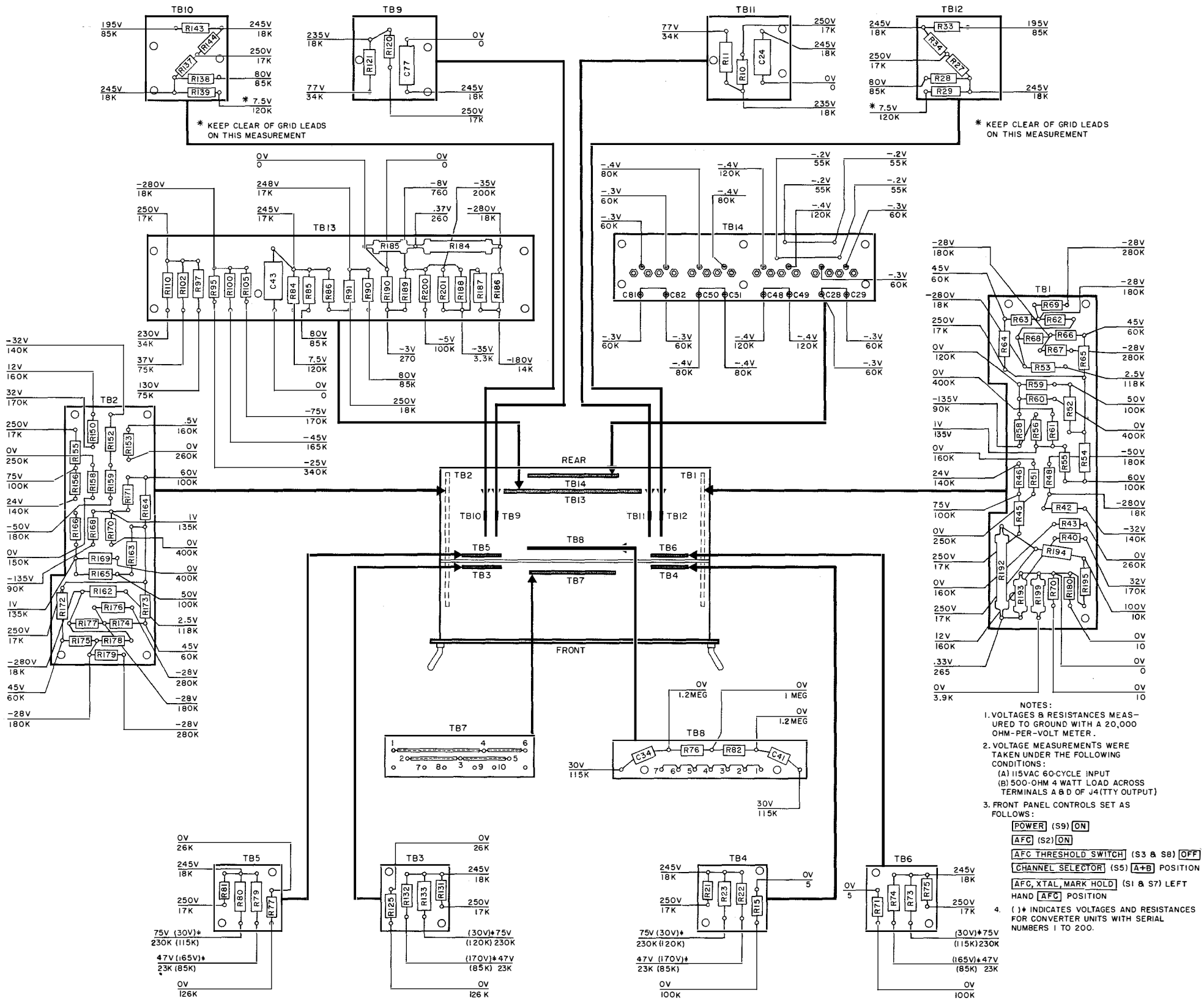

Figure 43. Resistor and capacitor board voltages and resistors.

to indicate dc voltage between terminal 3 of low-pass filter Z5 and ground. Rotate the CHANNEL SELECTOR switch to the A + B position.

(2) The multimeter should read zero, indicating correct discriminator tuning. If a zero reading is not obtained, change the input frequency slightly.

(3) Decrease the frequency of the applied signal to both INPUT A and INPUT B by 1 kc to simulate a spacing signal. Follow the procedure given in *h* (3) above. Make sure the multimeter indicates a negative 30 ± 5 volts dc. Increase the applied frequency 1 kc for a marking signal by following the procedure in *f* (4) above. The multimeter should indicate approximately 30 ± 5 volts dc in the positive direction. If the conventional discriminator response just described is not obtained, check tubes V21, V22, discriminator networks Z3 and Z4, switches S1C and S7C, low-pass filter Z5, and the associated circuit elements.

j. Keyer and Output Circuits.

(1) Connect the signal generator to INPUT A. Set the signal generator to the operating frequency and adjust its output to 5,000 microvolts. (The signal generator is at the operating frequency when the DISCRIMINATOR meter M4 indicates zero.) Connect the electronic multimeter across the 500-ohm resistor in the tty output circuit (*b* above). Rotate the CHANNEL SELECTOR switch to position A.

(2) Decrease the frequency of the applied signal by approximately 1 kc to simulate a spacing signal. The multimeter should indicate zero. Gradually increase the applied frequency approximately 2 kc (1 kc above the operating frequency) for a marking signal. As the signal generator is tuned through the operating frequency, the reading on the electronic multimeter should change instantaneously from 0 to 30 ± 5 volts dc. The point at which this change occurs is indicated on DISCRIMINATOR meter M4 by the meter needle passing through zero.

(3) If the procedure above fails to give the indicated results, check the settings of potentiometers R94, R99, and R109 as described in paragraph 63. If the operation still is not normal after adjusting the keyer potentiometers, check tubes V23, V24, V25, and V26, and associated circuit elements.

Section II. REPAIRS

58. Replacement of Parts

a. General. Most of the parts in Frequency Shift Converter CV–116/URR are readily accessible and are easily replaced if found to be faulty. Careless replacement of parts often causes new faults to develop. Whenever the unit is serviced, observe the following precautions:

(1) Be careful when cover plates are removed. Dangerous voltages are exposed.

(2) Before a part is unsoldered, note the position of the leads. If the part (such as a transformer or switch) has a number of connections, tag each lead.

(3) When removing screws from parts, try to keep the screws in individual groups corresponding to the components which they fasten to the chassis. This will speed the reassembly process.

(4) Be careful not to damage other leads by pulling or pushing them out of the way.

(5) Do not allow drops of solder to fall into the set; they may cause short circuits.

(6) A carelessly soldered connection may create a new fault. It is very important to solder the joints well. A poorly soldered joint can be one of the most difficult faults to find. For specific instructions on replacing the UG–88/U connectors, see figure 50.

(7) When a new part is installed, it should be placed exactly as the original. A part which has the same electrical value, but different physical size, may cause trouble in hf circuits. Give particular attention to proper grounding when replacing a part. Use the same ground as in the original wiring.

b. Disassembly of Afc Unit Z9. Afc unit Z9 is an assembly located on the underside of the converter chassis (fig. 47). The essential components

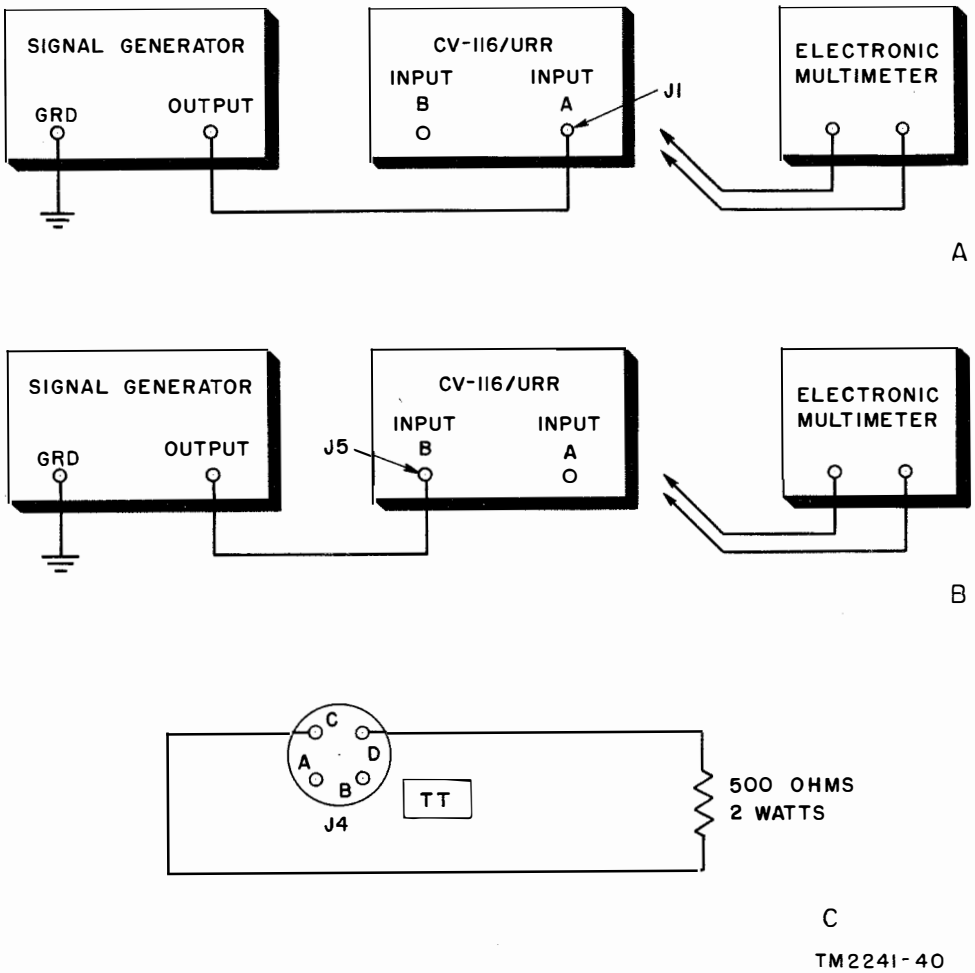

Figure 44. Setup for troubleshooting equipment when divorced from system.

mounted inside Z9 are shown in figure 48. These components consist of variable capacitor C8, a gear train for mechanically linking the capacitor to motor B1, and limit switch S4. Switch S4 completes the circuit for a warning bell when C8 has been driven near minimum or maximum capacity. A friction clutch connects C8 to front panel DRIFT INDICATOR knob E14. The front panel AFC INDICATOR is a spinner disk geared to the motor shaft, and it indicates motor rotation when the afc circuit is correcting. The motor leads terminate in connector J3, and the capacitor leads terminate in coaxial connector J2. Both of these receptacles are located on the rear of Z9.

(1) To remove Z9 from the converter, rest it on a fairly level surface in an inverted position.

(*a*) Disconnect P1 from J2 by rotating the locking ring 90° and withdrawing the plug.

(*b*) Disconnect P2 from J3 by undoing the locking sleeve and withdrawing the plug.

(*c*) Remove DRIFT INDICATOR knob E14 by removing the screw that holds it to the shaft extending from Z9 through the front panel.

(*d*) Remove the four ⅞-inch No. 8–32 screws that hold Z9 to the front panel.

(*e*) Lift Z9 clear of the converter for further disassembly.

(2) To disassemble Z9 for access to S4, B1, and C8, remove the ¼-inch No. 6–32 screw located next to J2 and J3 on the rear of Z9. Carefully remove the dust cover by

pulling it squarely off. Avoid striking any of the components within.

Caution: Do not remove the two 2¾-inch hexagonal studs that hold the mounting bracket for J2 and J3 or the screws that hold the studs will be released in the gear case. This will necessitate further disassembly of the unit for their recovery.

(3) To remove capacitor C8, remove the two ¼-inch No. 6–32 flat-head screws that hold the mounting bracket for J2 and J3 to the hexagonal studs. Wire slack will allow the bracket to be laid back so that C8 may be lifted clear.

(*a*) Unsolder the yellow leads that connect the stator and rotor of C8 to J2.

(*b*) Remove the four ¼-inch No. 4–40 screws that hold the capacitor mounting plate to the gear case casting.

(*c*) Lift the capacitor and its associated mounting bracket clear of the gear case casting. A slight force is required to withdraw the capacitor and capacitor mounting bracket assembly. The assembly will seem to bind because of the friction effect of coupling O 11.

(4) To remove B1, remove the three screws on the panel end of Z9 which are recessed most deeply. These three 1-inch No. 6–32 screws can be further identified by their alinement with the mounting bosses of the motor. Lift the motor free of the gear case.

(5) To remove S4, remove the two 7/16-inch No. 4–40 screws that hold the microswitch

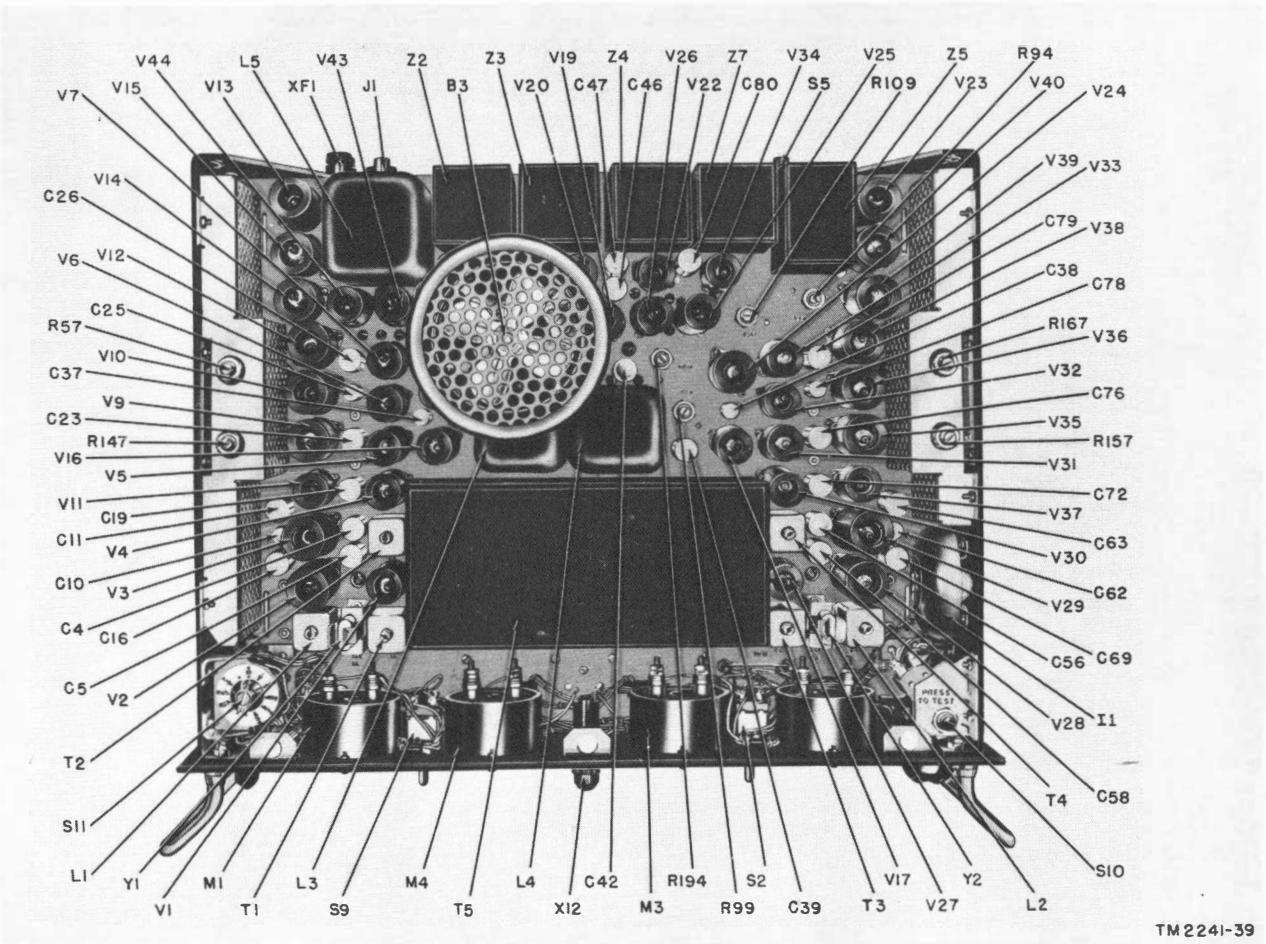

Figure 45. Frequency Shift Converter CV-116/URR, top view.

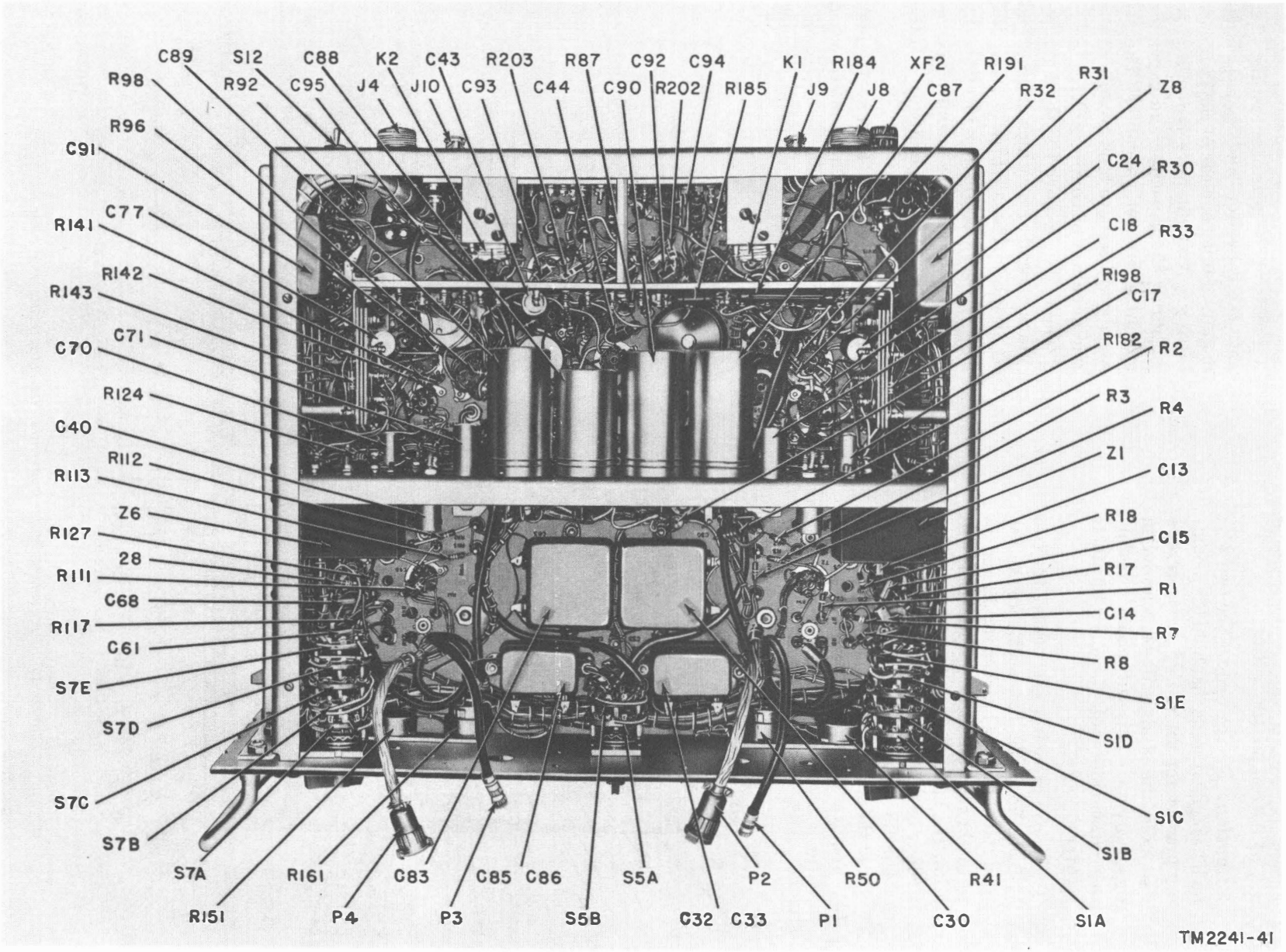

Figure 46. Frequency Shift Converter CV-116/URR, bottom view, with afc units removed.

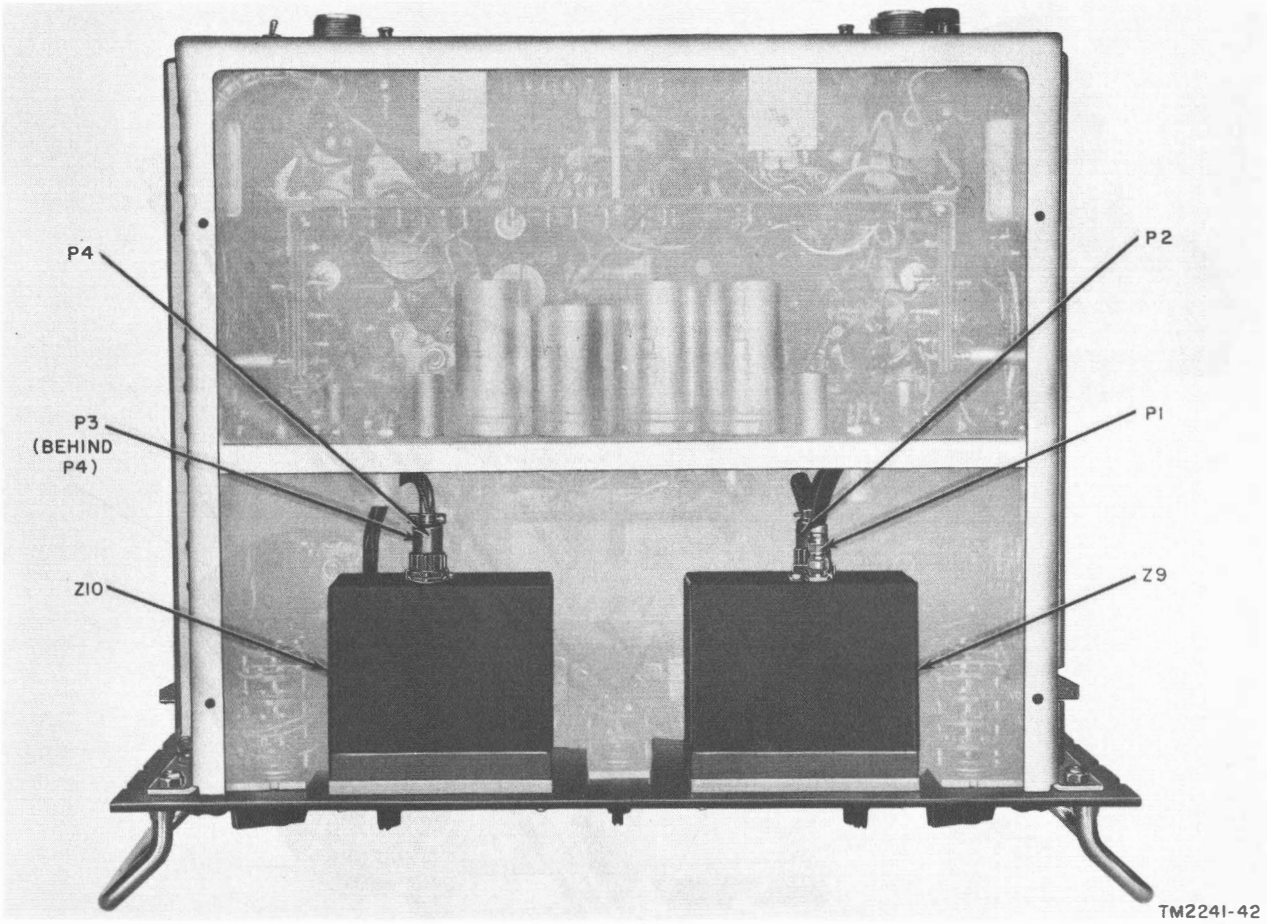

Figure 47. Frequency Shift Converter CV-116/URR, bottom view, showing afc units in place.

and roller bracket to the gear case. Remove the microswitch and roller bracket by unsoldering the blue and violet leads.

(6) To disassemble gear case of Z9 for access to gear train, remove the five shallow set $\frac{5}{16}$-inch No. 6–32 screws from the panel end of Z9. Note that the remaining three screws hold the motor in place and are recessed more deeply in clearance holes. The motor need not be removed when entering the gear case. Hold the plane of the gear case cover horizontally, and remove the cover vertically upward so that the gears will remain in their proper relative position. The cover is kept in alinement by two pins which offer substantial friction as the cover is removed. If it is necessary to pry off the cover, be careful to pry evenly to avoid bending the key pins and gear shafts. The gear train can be reached when the cover of the gear case is removed.

(7) To remove the clutch assembly, loosen the two Allen-head screws on the switch activating cam (located on the rear of the gear case), and withdraw the clutch and gear assembly.

(8) To remove the spinner assembly, gently pry off the clear plastic cap protecting the indicating spinner. The spinner and its driving gear now may be disassembled by removing the No. 2–56 nut on the top of the spinner.

Note. Disassembly of afc unit Z10 and its component parts, motor B2, switch S6, and capacitor C60 is similar to disassembly of afc unit Z9.

c. Removal of Alarm Bell. To remove alarm bell I 1, pull back the sleeving over the two black leads and then unsolder the connections. Remove

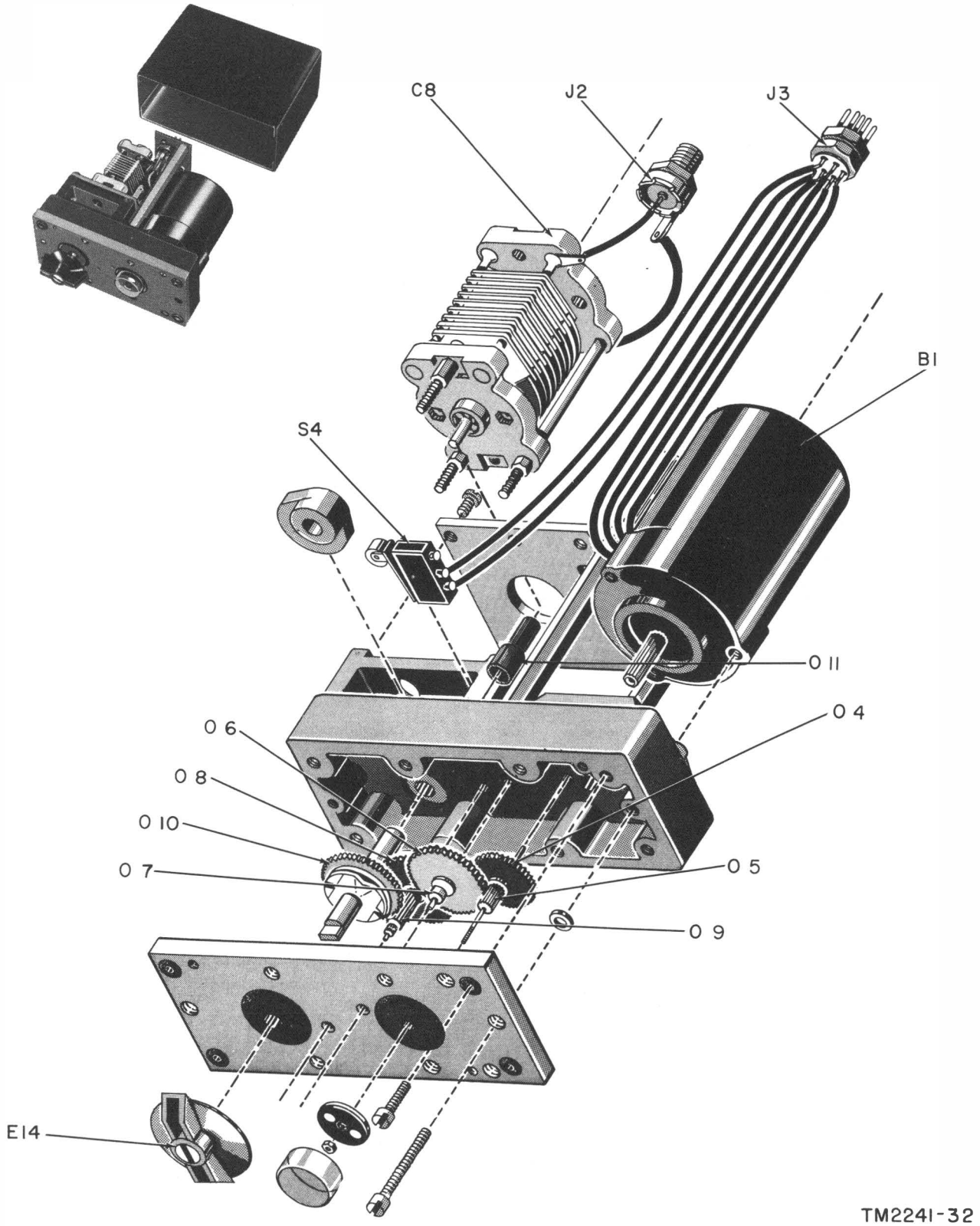

Figure 48. Exploded view of afc unit Z9.

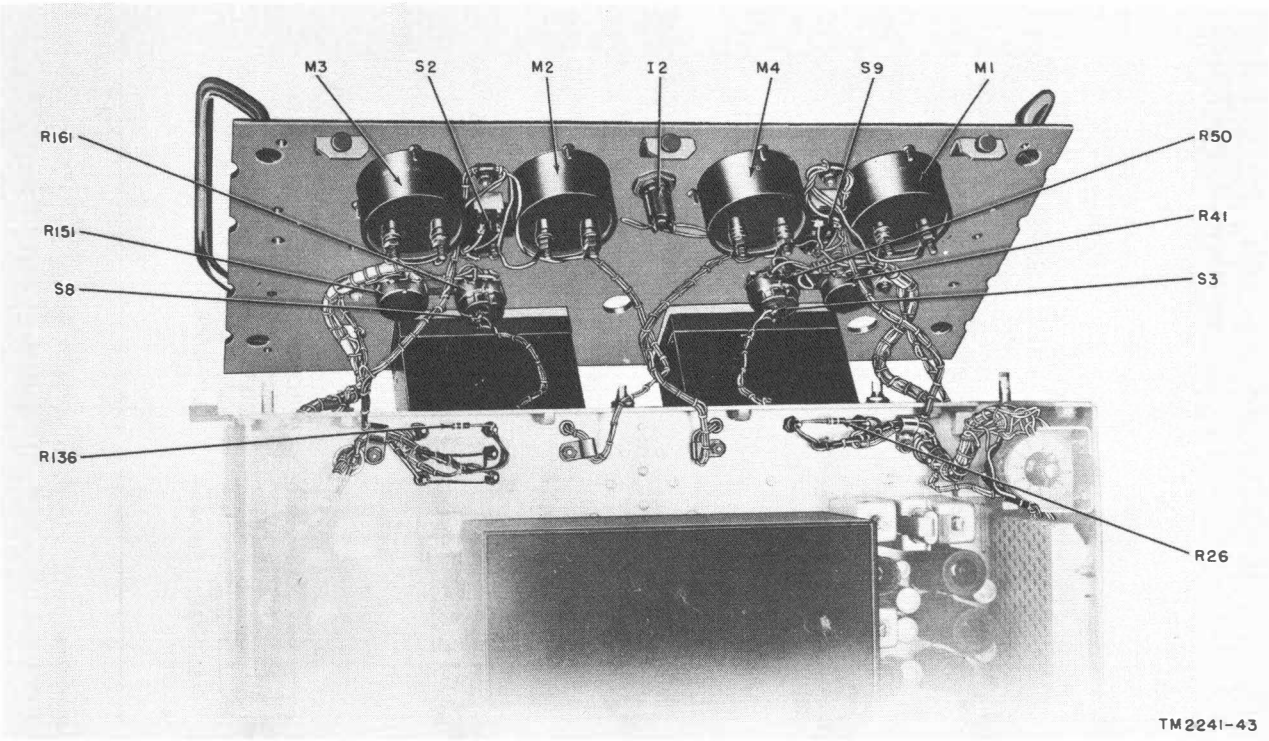

Figure 49. Frequency Shift Converter CV-116/URR, rear of front panel.

the two screws that hold the bell support bracket to the chassis and pull the assembly away. Remove the alarm bell from the bracket.

d. Replacement of Fan Motor. To remove fan motor B3, unsolder the four motor leads from the tie points located on the bottom of the chassis. Remove the fan guard. Unscrew the motor support bracket. Lift the assembly away from the unit at the top. Unscrew the motor from the support bracket.

59. Relay Adjustments

a. General. Relays K1 and K2 are single-coil relays. The adjustment requirements are both mechanical and electrical. The mechanical requirement consists of the proper armature travel. The electrical requirements are the specified currents through the winding which should cause the relay to operate or to release from the operated position. When checking the requirements, the armature must be operated *electrically* to insure accuracy of the setting.

b. Cleaning. The greatest source of relay failures is the presence of particles of dirt or lint between contacts or around the hinge pin. When cleaning the relays, proceed as follows:

(1) Remove the relay from the bracket by removing the two retaining screws. Position the relay on either side of the bracket so that its working parts are exposed for cleaning. Be careful not to damage the relay leads or other wiring.

(2) Carbon tetrachloride may be used to remove grease or oil from contacts. Deposit small drops of the carbon tetrachloride on the contacts with a toothpick. Do not rub. Be careful not to spill any liquid on the spoolheads and insulators.

(3) Cut several strips of paper about one-half inch wide to be used in burnishing the contacts. Do not burnish the contacts until they have dried thoroughly. To burnish the normally open contacts, place the paper strip between the contacts, and press the contacts together with a matchstick to give a slight pressure against the paper strip. At the same time, pull the strip of paper between the contacts. The desired result usually is obtained by pulling a clean strip of paper between the contacts two or three times. In the case of the normally closed con-

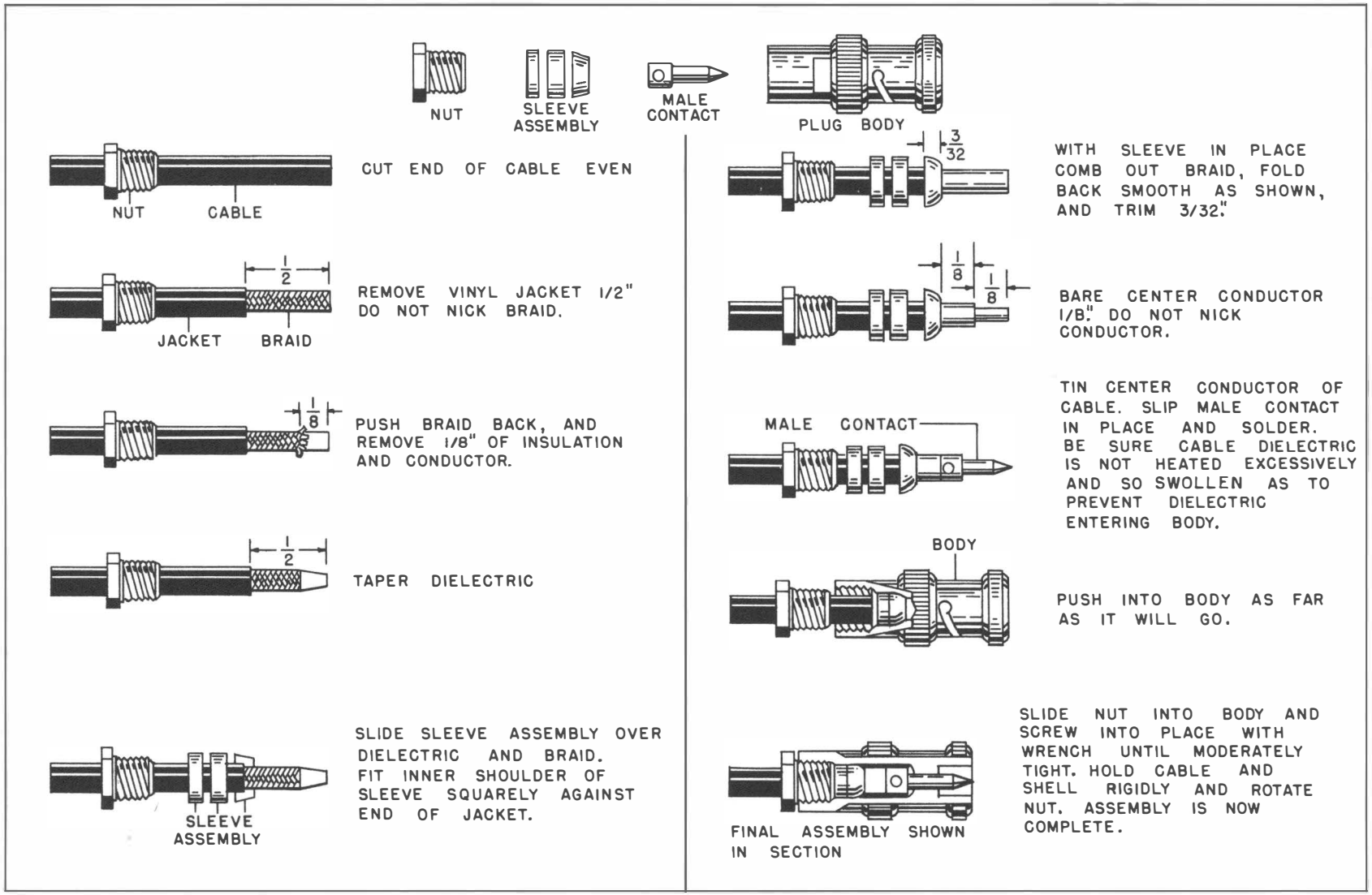

TM2241-57

Figure 50. Replacement of connectors.

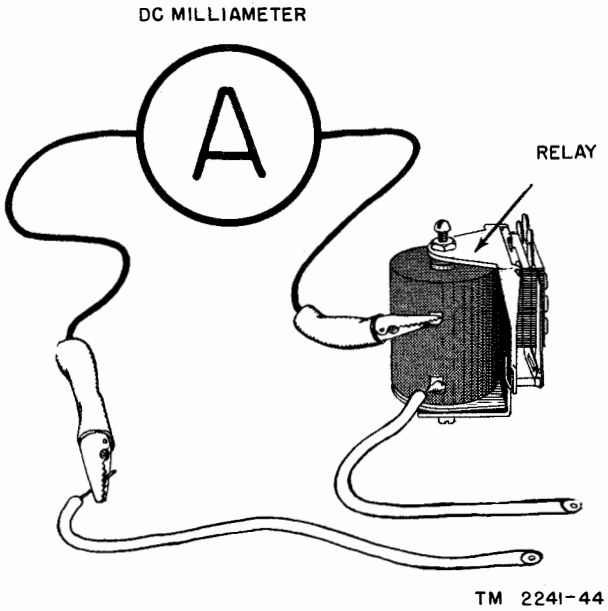

Figure 51. Circuit for measuring relay current.

tacts, the tension of the spring leaves usually furnishes enough pressure against the paper burnisher.

(4) Clean the opening between the armature adjusting screw and the pole face in a similar manner by drawing a strip of paper between the two surfaces.

(5) Deposit several drops of carbon tetrachloride on the hinge pin to clean out any foreign material or grease.

(6) Replace the relay on its mounting bracket.

c. Adjustment of Relay. The armature travel must be adjusted whenever relay K1 or relay K2 fails to meet the following electrical requirements: operate, 4.5 to 5 ma; release, 3.2 to 3.8 ma. Always make the relay meet these current requirements after every cleaning. To check the operation of relay K1 or relay K2, proceed as follows:

(1) Remove the relay from the relay bracket by removing the two retaining screws. Position the relay on either side of the bracket so that its working parts are exposed for adjustment. Be careful not to damage the relay leads or other wiring.

(2) Unsolder one of the leads to the relay winding. Connect Multimeter TS-352/U (using the 10-ma range) in series with this unsoldered lead and the winding (fig. 51).

(3) Connect either a receiver or a signal generator to the INPUT A or INPUT B jack. Tune the signal source until DISCRIMINATOR meter M4 indicates zero. Note the frequency of the signal source. Decrease this frequency by 1 kc. A steady space signal now is being applied to the converter. Adjust the afc THRESHOLD LEVEL control to obtain the *operate* current of 4.5 to 5 ma. At the same time, observe the operation of the relay contact points. The printer can be used as an indication of operation for one set of contacts and the afc circuit as an indication of the other set. By means of the same control, reduce the current to the release value; the relay should release. When the relay closes (operates), the printer should shift from space to mark operation and the afc should be disabled. When the relay opens (releases), the printer shifts back to space operation and the afc is reestablished.

(4) The make-and-break operation of the contacts also can be checked with Multimeter TS-352/U. To check the operation of the mark-hold contacts, connect the meter between ground and pin 4 of the relay. The voltage at this point when the contacts are open is approximately 130 volts dc. To check the afc contacts, connect the meter between pins 2 and 3 of the relay. The voltage should be 115 volts ac when the contacts are open.

(5) If the relay fails to meet the current requirements, adjust it as shown in figure 52. Use a small screwdriver. To change the pull-in operating point, loosen the two contact assembly screws as indicated in A, figure 52 and slide the entire assembly to adjust the gap between armature and pole face. Decrease the gap if the current required for pull-in is too high. Increase the gap if the contacts pull in at a very low current. Be sure the screws are tightened after making the proper adjustment. To make the relay release at a lower value of current, turn the armature adjusting screw in (fig. 52Ⓑ).

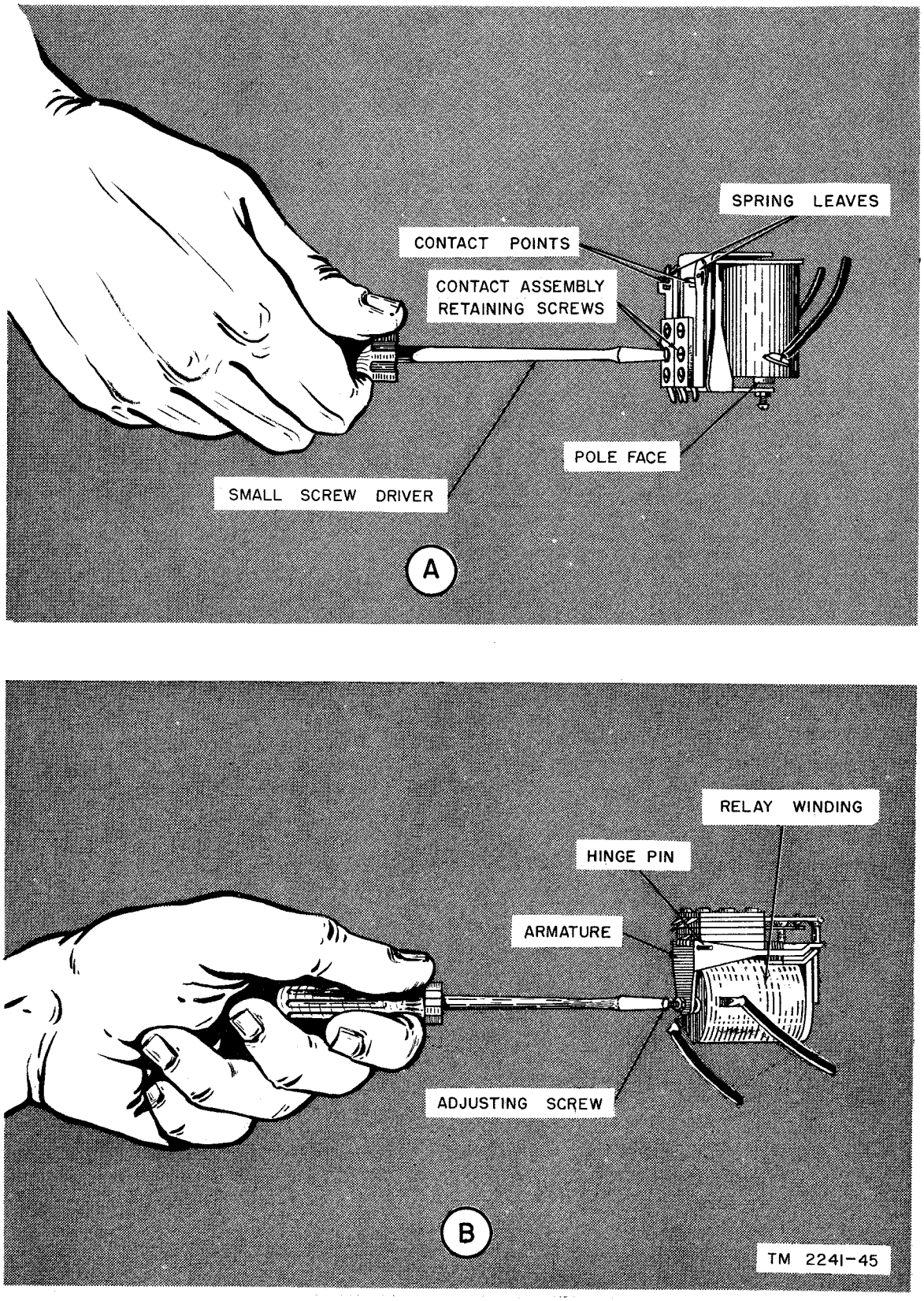

Figure 52. Adjusting relay K1 or K2.

Turning the screw out increases the current necessary to cause the relay points to open.

(6) After adjustment, replace the relay on its mounting bracket.

60. Refinishing

Instructions for refinishing badly marred panels on exterior cabinets are given in TM 9–2851. Also refer to paragraph 35.

Section III. ALINEMENT PROCEDURES

61. Rf Alinement

a. Alinement of Channel A Input Circuit. The converter is equipped with the crystals necessary for operation with a receiver having an if. frequency of 455 kc. A 405-kc crystal is used in channel A to produce a converter frequency of 50 kc. A 425.7-kc crystal is used in channel B to produce an if. in this channel of 29.3 kc. To use the converter with receivers having an if. other than 455 kc, it is necessary to realine the input circuits of the converter. In channel A, use a crystal (Y1) whose frequency is 50,000 kc below the receiver if. output frequency. The converter may be alined either with a receiver tuned to a strong rf carrier or a signal generator delivering a 2,000-microvolt signal equal to the if. of the receiver intended to be used. To aline channel A, short out INPUT B with a small piece of wire and proceed as follows:

(1) Throw the POWER switch on. Set the CHANNEL SELECTOR switch to position A. Throw the AFC switch to the OFF position. Place the channel A AFC-XTAL-MARK HOLD switch either in the left- or the right-hand XTAL position. No other switches affect the adjustments which follow. Loosen the tuning slug locknuts on the top of transformers T1 and T2 (fig. 45). Adjust T1 and T2 to obtain a maximum deflection of channel A SIGNAL INPUT meter M1. If meter M1 goes to full-scale reading, decrease the output of receiver A and continue to tune T1 and T2 for maximum indication. Tighten the locknuts slightly after they are set properly; be careful to maintain the peak meter reading.

(2) Set the channel A AFC-XTAL-MARK HOLD switch to AFC and the DRIFT INDICATOR to zero leaving the other switches as previously set. Loosen the tuning slug locknut on the top of coil L1 (fig. 45). The oscillator adjustment now may be made. The oscillator will tune either 50 kc above or 50 kc below the input signal as indicated on the SIGNAL INPUT and DISCRIMINATOR meters. Proper tuning is 50 kc below the input signal. To obtain the correct tuning, the simplest procedure is to turn the slug of L1 all the way down (in a clockwise direction) and then tune to the first maximum indication on the channel A SIGNAL INPUT meter by raising the slug until channel A DISCRIMINATOR meter M4 indicates zero. After adjustment, lock the slug in place by holding the slug in position and tightening its lower locking nut against the shoulder of the can.

b. Alinement of Channel B Input Circuit. The method of adjustment for channel B is identical with that used for channel A, except for the if. frequency settings. Use a crystal (Y2) whose frequency is 29.3 kc below the input frequency. Short out INPUT A. Plug in a signal generator delivering a 2,000-microvolt signal at the if. frequency of the receiver being used to feed channel B.

(1) Set the channel B AFC-XTAL-MARK HOLD switch to XTAL. Loosen the tuning slug locknuts on top of transformers T3 and T4 (fig. 45). Adjust T3 and T4 to obtain a maximum deflection of channel B SIGNAL INPUT meter M2. If meter M2 goes to full-scale reading, decrease the output of receiver B and continue to tune T3 and T4 for a maximum indication. After adjustments, lock the slugs in place.

(2) Set the channel B AFC-XTAL-MARK HOLD switch to AFC, and the DRIFT INDICATOR to zero. Loosen the tuning slug locknut on top of L2 (fig. 45). Turn the slug of L2 all the way down. Tune to the first maximum indication on the channel B SIGNAL INPUT meter

by raising the slug until the channel B DISCRIMINATOR meter indicates zero. Lock the slug in place.

62. Discriminator Alinement

a. Alinement of Channel A Discriminators. Turn on the signal generator and allow it to reach a stable operating temperature (approximately 15 minutes). All discriminator tuning adjustments are located at the rear of the chassis (fig. 9). Set the channel A AFC-XTAL-MARK HOLD switch to XTAL and the CHANNEL SELECTOR to A. Proceed as follows:

(1) Set tuning capacitors C28 and C29 to half capacity (slots vertical).

(2) Connect the signal generator to INPUT A. Tune the generator for a reading of zero on channel A DISCRIMINATOR meter M4.

(3) Turn metering switch S11 (fig. 10) to the A+B position. In this position, M4 (channel A DISCRIMINATOR meter) indicates the combined output of discriminator circuits Z3 and Z4 when the PRESS TO TEST switch is pressed.

(4) While depressing the PRESS TO TEST switch, adjust capacitors C48 and C49 to obtain a zero reading on meter M4. If this is impossible, retune the signal generator slightly so that A+B indicates zero and then release the PRESS TO TEST switch. Retune C28 and C29 for a zero reading on the DISCRIMINATOR meter. The object of this procedure is to tune both the channel A afc discriminator and the channel A diversity discriminator to zero output for an identical input frequency to INPUT A.

b. Alinement of Channel B Discriminators. All discriminator tuning adjustments are located at the rear of the chassis (fig. 9). Set the channel B AFC-XTAL-MARK HOLD switch to XTAL and the CHANNEL SELECTOR to B. Proceed as follows:

(1) Set tuning capacitors C81 and C82 to half capacity (slots vertical).

(2) Connect the signal generator to INPUT B. Tune the generator for a reading of zero on channel B DISCRIMINATOR meter M3.

(3) Turn metering switch S11 (fig. 10) to the A+B position. In this position, M4 (channel A DISCRIMINATOR meter) indicates the combined output of discriminator circuits Z3 and Z4 when the PRESS TO TEST switch is pressed.

(4) While holding down the PRESS TO TEST switch, adjust capacitors C50 and C51 to obtain a zero reading on meter M4. If this is impossible, retune the signal generator slightly so that A+B indicates zero and then release the PRESS TO TEST switch. Retune C81 and C82 for a zero reading on the channel B DISCRIMINATOR meter. The object of this tuning procedure is to get channel B DISCRIMINATOR and A+B meter to indicate zero for an identical input frequency to channel B.

63. Keyer and Afc Adjustments

(fig. 10)

a. Keyer Adjustments. Rotate the CHANNEL SELECTOR switch to position A and the channel A AFC THRESHOLD LEVEL control to OFF. This prevents a mark-lock condition which would unbalance the keyer circuits. Make the following settings in sequence:

(1) Set meter switch S11 to the R94 position. Push the PRESS TO TEST switch and adjust potentiometer R94 for zero on meter M4. (This puts approximately −8 volts on grid pin 2 of tube V24A.)

(2) Set switch S11 to the R99 position. Push the PRESS TO TEST switch and adjust potentiometer R99 for a zero reading on meter M4. (This results in a zero bias on grid pin 7 of the tube V24B.)

(3) Set switch S11 to the R104 position. Push the PRESS TO TEST switch and adjust potentiometer R104 for zero on meter M4. (This puts approximately −35 volts on the control grids of tubes V25 and V26.)

(4) With a printer connected to the tty output, set switch S11 to position R109. Push the PRESS TO TEST switch and adjust potentiometer R109 to 60 microamperes as read on DISCRIMINATOR meter M4. This reading multiplied by 1,000 is 60 milliamperes, the proper loop current.

(5) If a printer is not available, connect a resistive load (125 to 500 ohms) across pins D and A of J4 and adjust potentiometer R109 to 60 microamperes. This reading multiplied by 1,000 is 60 milliamperes.

b. Channel A Afc Adjustments. Rotate the CHANNEL SELECTOR switch to position A, the channel A AFC-XTAL-MARK HOLD switch to the AFC position, and set the AFC THRESHOLD LEVEL control to OFF. Tune in a strong signal on channel A or connect a signal generator set to deliver the receiver if. at 2,000 microvolts at INPUT A. Throw the AFC switch to the ON position. Adjust the motor circuit in the following manner:

(1) Set switch S11 to the R57 position.
(2) Push the PRESS TO TEST switch and adjust potentiometers R57 and R47 for a minimum current through meter M4 and also for motor balance as indicated by a stopping of the channel A AFC INDICATOR. This is accomplished by first stopping the motor with R47, reducing the current indicated on M4 with R57, rebalancing the motor with R47, and again reducing the current until the motor balances at a current of approximately 1 microampere through M4.

c. Channel B Afc Adjustments. Rotate the channel SELECTOR switch to a position B, the channel B AFC-XTAL-MARK HOLD switch to the AFC position, and set the AFC THRESHOLD LEVEL control to the OFF position. Tune in a strong signal on channel B and throw the AFC switch to the ON position. Adjust the motor circuit in the following manner:

(1) Set switch S11 to the R167 position.
(2) Push the PRESS TO TEST switch and adjust potentiometers R167 and R157 for a minimum current through meter M4 and also for a motor balance as indicated by a stopping of the channel B AFC INDICATOR. These adjustments are identical with those described in *b*(2) above.

Section IV. FINAL TESTING

64. General

This section is intended as a guide to be used in determining the quality of Frequency Shift Converter CV-116/URR repaired at higher echelon levels. The minimum test requirements outlined in the following paragraphs may be performed by maintenance personnel with adequate test equipment and the necessary skills. Repaired equipment meeting these requirements will furnish uniformly satisfactory results during operation. The tests given in paragraphs 65 through 70 should be performed in the order given. Before performing any of the tests that follow, check the B+ and B− voltages (par. 57*c*).

65. Test Equipment

The following equipments, or equal, are required to perform the tests in this section:

Test equipment	Technical manual
Multimeter TS-352/U	TM 11-5527
Electronic Multimeter TS-505/U	TM 11-5511
RF Signal Generator Set AN/URM-25	TM 11-5551
Frequency Meter Set SCR-211-( )	TM 11-300
Frequency Meter FR-67/U	TM 11-2698
Teletypewriter TG-7-B	TM 11-352

66. Rf Circuit Tests

a. Connect the test equipment as shown in figure 53.

b. Adjust the signal generator to the frequency normally fed to INPUT A from the receiver and set it for a 10,000-microvolt output. The voltage at the grid (pin 7) of V3 should be approximately 1.3 volts ac.

c. Adjust the rf signal generator to 5 kc above and 5 kc below the normal INPUT A frequency. Observe the voltage at pin 7 of V3 for each setting. The reading should be approximately 0.9 volt ac.

d. Repeat the test described in *c* above for frequencies 10 kc above and below the frequency normally fed to INPUT A. The meter B readings at pin 7 of V3 should be approximately 0.45 volt ac. The response should be close to that shown by the curve in figure 54.

e. Repeat the tests described in *a* through *d* above on channel B. Connect electronic multimeter B to the grid (pin 7) of V29 and the rf signal generator to INPUT B. Again, observe that the response of the rf amplifier is close to that shown in figure 54.

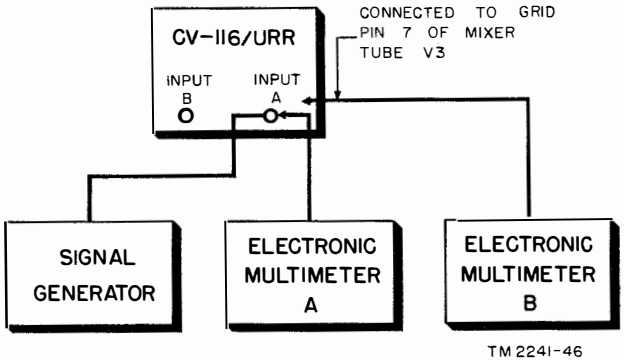

Figure 53. Setup for channel A rf circuit tests.

67. Limiting Amplifier Tests

a. Connect the test equipment as shown in figure 55.

b. Adjust the signal generator to the frequency normally fed to INPUT A from the receiver.

c. Adjust the output level of the signal generator to give an indication of 50 microvolts on electronic multimeter A. The voltage at the plate (pin 5) of V7 should be approximately 50 volts ac.

d. Change the signal level at INPUT A to 100 microvolts. The voltage at the plate of V7 should again be approximately 50 volts ac.

e. Adjust the signal level at INPUT A to 500, 1,000, 2,000, 5,000, 10,000, and 100,000 microvolts. Observe the readings on meter A at each successive change in input level. The plate voltage reading at each input level should remain relatively constant at approximately 50±5 volts ac as shown in figure 56.

f. Repeat the tests described in *b* through *e* above on channel B. In channel B, tube V33 is the third afc limiting amplifier.

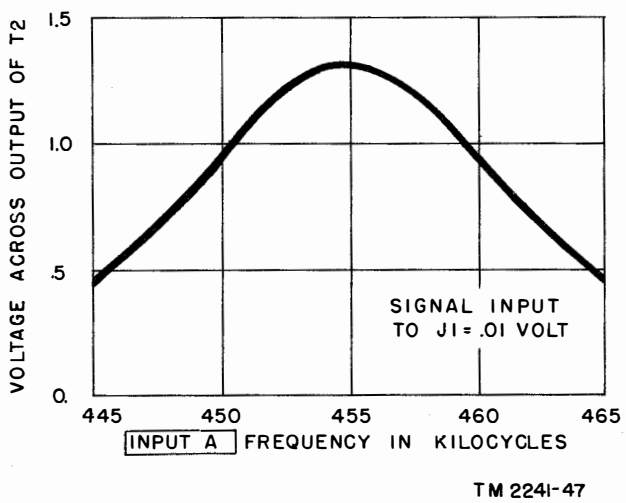

Figure 54. Channel A rf amplifier response curve.

g. Rotate the CHANNEL SELECTOR switch to the B position and short out INPUT A. Connect electronic multimeter B to the plate (pin 5) of the third diversity-limiting amplifier V20. Adjust the output level of the rf signal generator to give an indication of 50 microvolts at INPUT B. Electronic multimeter B should indicate approximately 50 volts ac.

h. Repeat the tests outlined in *d* and *e* above for the setup described in *g* above. The curve in figure 56 also applies to the diversity-limiting amplifier section.

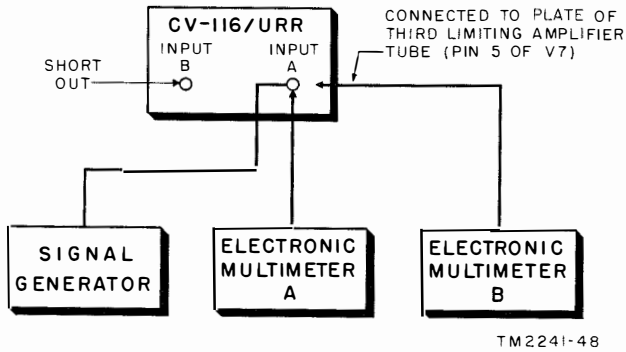

Figure 55. Setup for channel A limiting amplifier tests.

68. Discriminator Tests

a. Throw the AFC switch to OFF and connect the signal generator to INPUT A. Set the signal generator to the operating frequency and adjust its output to 10,000 microvolts.

b. The channel A DISCRIMINATOR meter M4 should read zero, indicating correct discriminator tuning. If a zero reading is not obtained, change the input signal frequency slightly.

c. Decrease the frequency of the applied signal by 425 cycles and check to see that meter M4 gives an indication of −50. Continue to decrease the frequency of the applied signal to a point 1 kc lower than the operating frequency. Meter M4 now should indicate slightly off scale to the left. Increase the applied frequency 425 cycles above the operating frequency and check to see that meter M4 indicates +50. A further increase to 1 kc above the operating frequency should drive M4 slightly off scale to the right.

d. Shift the signal generator from INPUT A to INPUT B. Repeat procedure described in *b* and *c* above for the channel B discriminator.

e. Rotate the CHANNEL SELECTOR switch to position B and set metering switch S11 to posi-

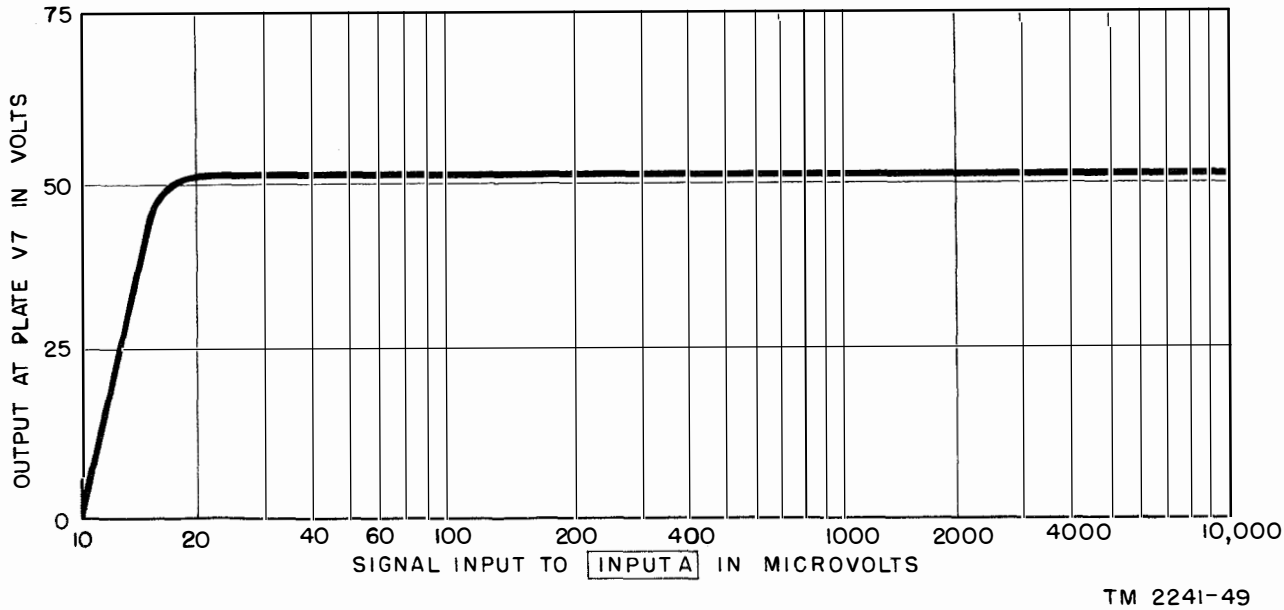

Figure 56. Response curve at output of third limiting amplifier.

tion A+B. Repeat the steps described in *b* and *c* above, while depressing PRESS TO TEST switch S10 and observing meter M4.

69. Band-Pass Filter Tests

a. Apply an input of 10,000 microvolts at the frequency normally fed to INPUT A from the receiver.

b. Connect an electronic multimeter across band-pass filter Z1.

c. Rotate channel A AFC-XTAL-MARK HOLD switch S1 to the XTAL position.

d. Slowly tune the signal generator to give a peak reading on the multimeter. This peak, which occurs at the center if. frequency, should be approximately 5 volts ac.

e. Tune the signal generator 800 cycles above and below the center frequency and observe the multimeter readings at each setting. The response of the band-pass filter should be close to that shown in figure 57.

70. Threshold Control Tests

a. Connect the rf signal generator and one electronic multimeter to INPUT A as shown in figure 58Ⓐ. Connect another multimeter across afc THRESHOLD LEVEL potentiometer R50 as shown in B, figure 58Ⓑ.

b. Adjust the signal generator to the frequency normally fed to INPUT A from the receiver.

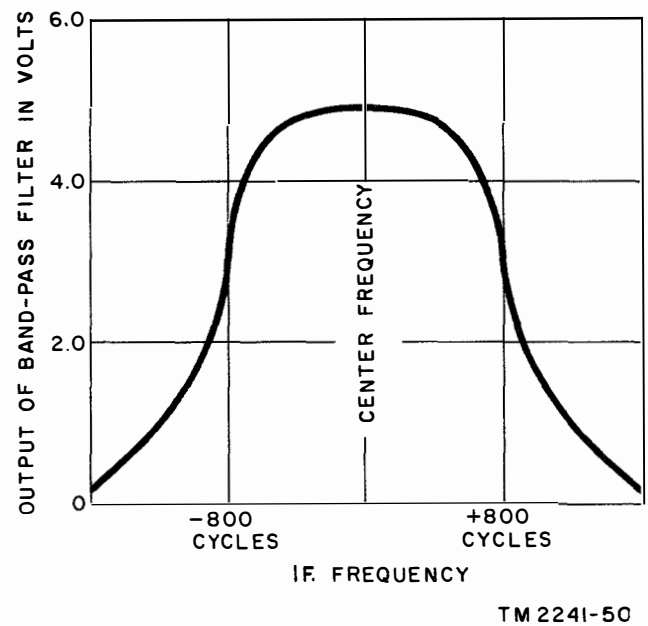

Figure 57. Band-pass filter response curve.

c. Slowly vary the output level of the signal generator from 0 to 3,000 microvolts. Observe the dc voltage readings on multimeter B. The readings should increase in the negative direction from 0 volts to approximately −40 volts (at an input signal of 2,000 microvolts) and then remain relatively constant at −40±5 volts for any further increase in input voltage from the signal generator.

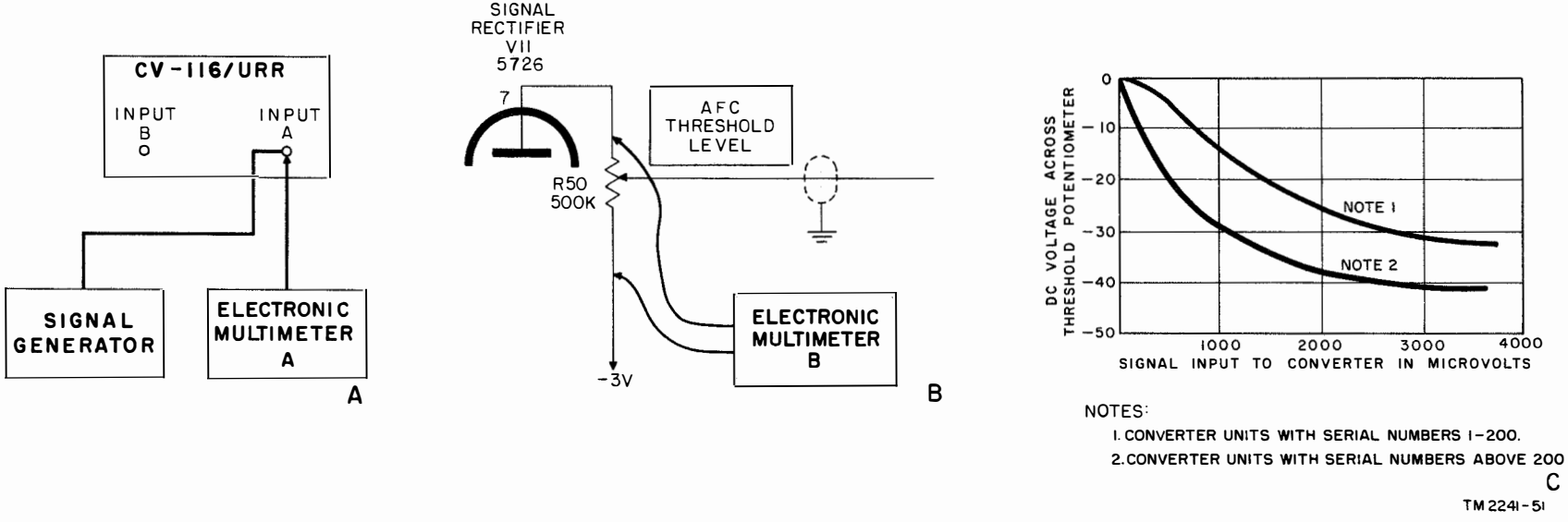

Figure 58. Setup for channel A threshold control test.

Note. On converter units, with serial numbers from 1 to 200, the negative increase goes to approximately −30 volts with an input signal of 2,500 microvolts. For any further increase in input voltage, the readings remain relatively constant at −30±5 volts. The curves in figure 58© illustrate the dc voltage across the threshold potentiometer with changing signal input to the converter.

71. Overall Transmission Tests

The final test of the frequency-shift converter is an operational test. Connect the INPUT A and INPUT B jacks to the output of two receivers (par. 14). Connect the output of the converter to a teletypewriter such as Teletypewriter TG-7-B. Satisfactory performance is achieved when 25 lines of test copy are received on the teletypewriter.

CHAPTER 7

SHIPMENT AND LIMITED STORAGE AND DEMOLITION TO PREVENT ENEMY USE

72. Repacking for Shipment or Limited Storage

a. The exact procedure in repacking for shipment or limited storage depends upon the material available and the conditions under which the equipment is to be shipped or stored. Refer to paragraph 12 and follow the instructions in reverse order.

b. Whenever practicable, place a dehydrating agent such as silica gel inside the chests or packing boxes. Protect the chests (or boxes) with a waterproof paper barrier. Seal the seams of the paper barrier with waterproof sealing compound or tape. Pack the protected chests in a padded wooden case, providing at least 3 inches of excelsior padding or some similar material between the paper barrier and the packing case.

73. Demolition to Prevent Enemy Use

The demolition procedures outlined in paragraph 74 will be used to prevent the enemy from using or salvaging this equipment. Demolition of the equipment will be accomplished only upon order of the commander.

74. Methods of Destruction

a. Smash. Smash the crystals, controls, tubes, coils, motors, switches, capacitors, and transformers; use sledges, axes, handaxes, pickaxes, hammers, crowbars, or heavy tools.

b. Cut. Cut cables and wiring; use axes, handaxes, or machetes.

c. Burn. Burn cables, resistors, capacitors, coils, wiring, and instruction books; use gasoline, kerosene, oil, flamethrowers, or incendiary grenades.

d. Bend. Bend panels, cabinet, and chassis.

e. Explosives. If explosives are necessary, use firearms, grenades, or TNT.

f. Disposal. Bury or scatter the destroyed parts in slit trenches, fox holes, or other holes, or throw them into streams.

g. Other. Destroy everything.

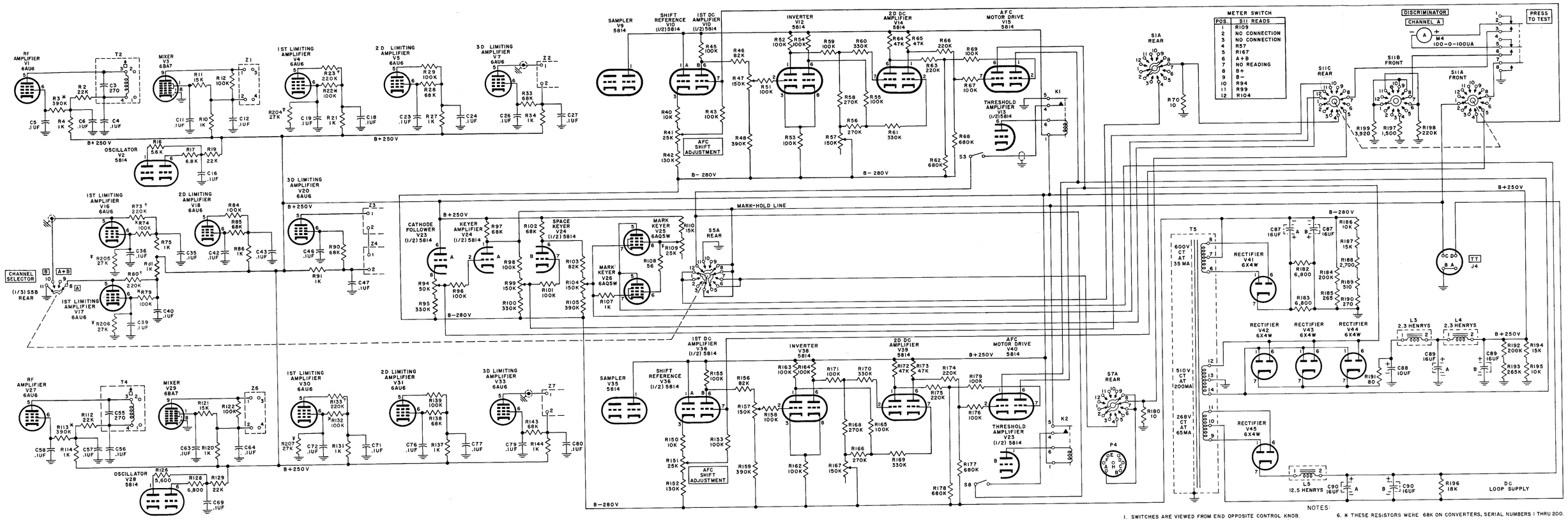

NOTES:

1. SWITCHES ARE VIEWED FROM END OPPOSITE CONTROL KNOB.
2. SECTIONS DESIGNATED "A" ARE NEAREST THE KNOB END.
3. ALL SWITCHES ARE SHOWN IN THE EXTREME COUNTERCLOCKWISE POSITION, EXCEPT S11.
4. RELAYS K1 AND K2 ARE SHOWN IN A DE-ENERGIZED POSITION.
5. UNLESS OTHERWISE SPECIFIED; ALL CAPACITORS ARE IN UUF, ALL RESISTORS ARE IN OHMS. (K= 1,000 OHMS).
6. * THESE RESISTORS WERE 68K ON CONVERTERS, SERIAL NUMBERS 1 THRU 200.
7. + THESE RESISTORS WERE 100K ON CONVERTERS, SERIAL NUMBERS 1 THRU 200.
8. ‡ THIS RESISTOR WAS 15K ON CONVERTERS, SERIAL NUMBERS 1 THRU 200.
9. ‡ THESE RESISTORS WERE OMITTED ON CONVERTERS, SERIAL NUMBERS 1 THRU 200.

TM2241-70

Figure 59. B+ voltage distribution diagram.

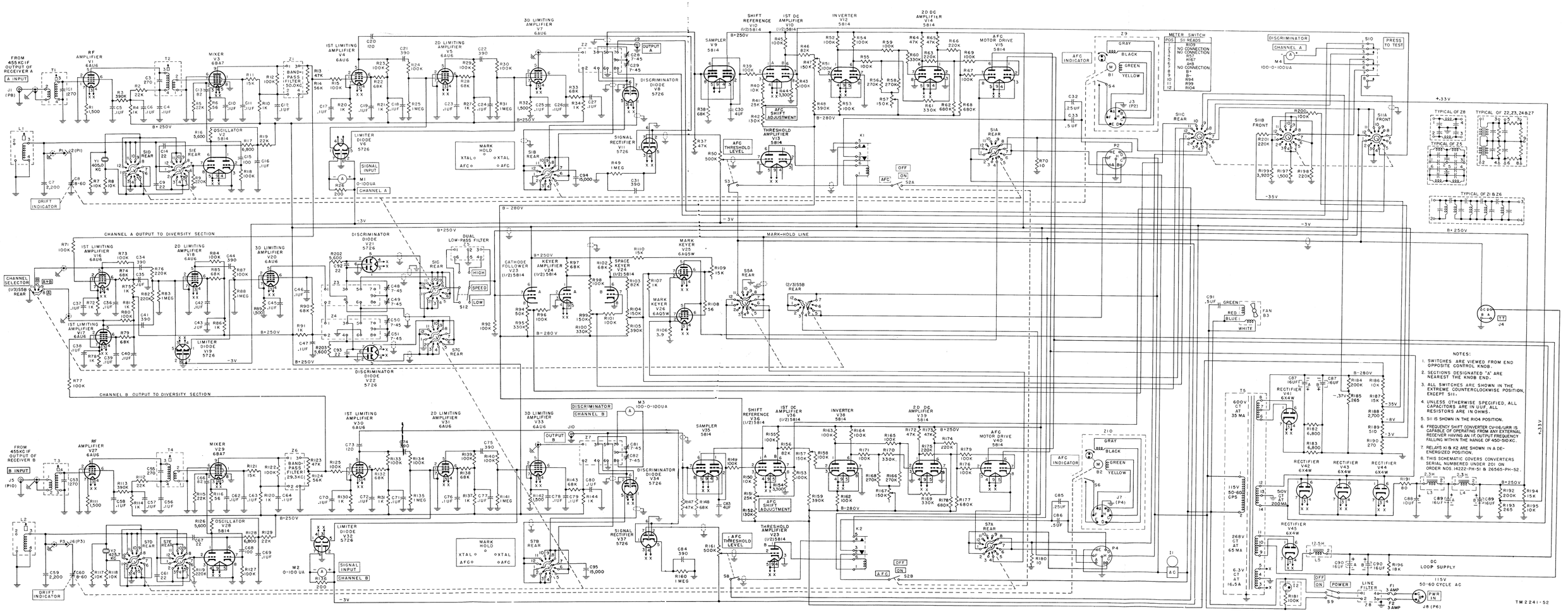

Figure 62. Frequency Shift Converter CV-116/URR, serial numbers 1-200, schematic diagram.

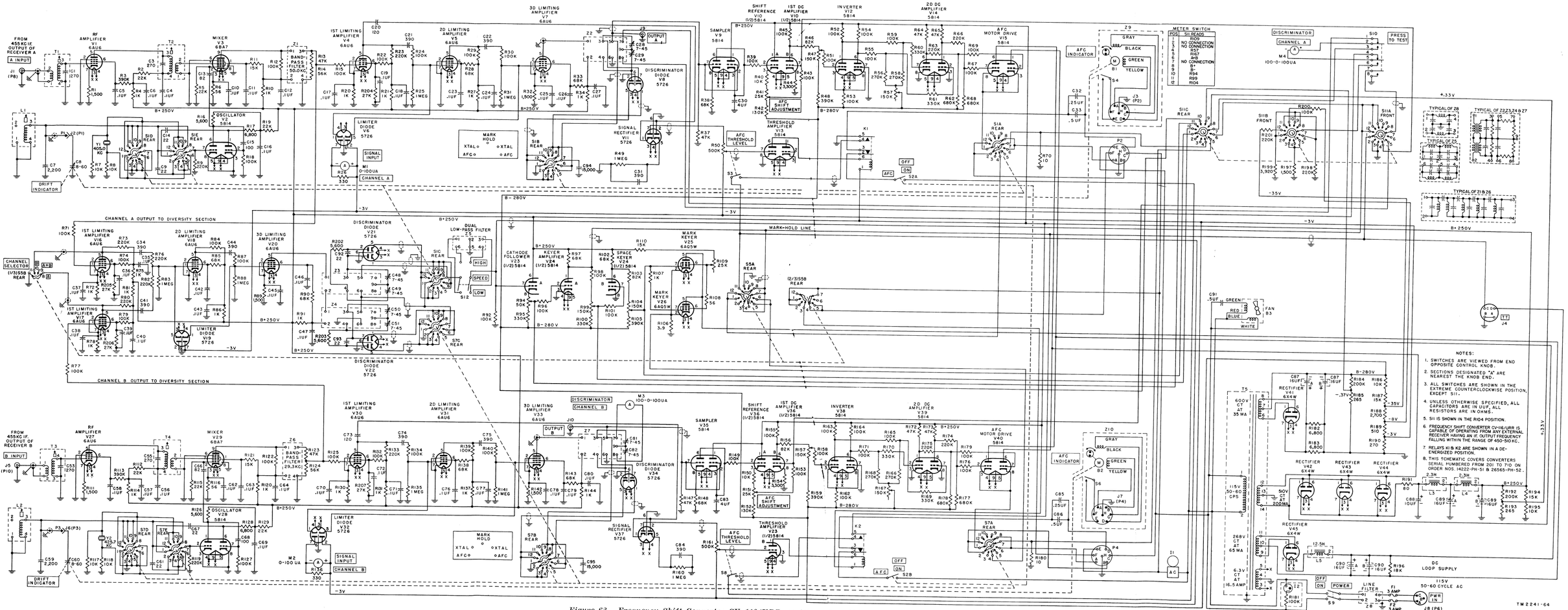

Figure 63. Frequency Shift Converter CV-116/URR, serial numbers 201 and higher, schematic diagram.

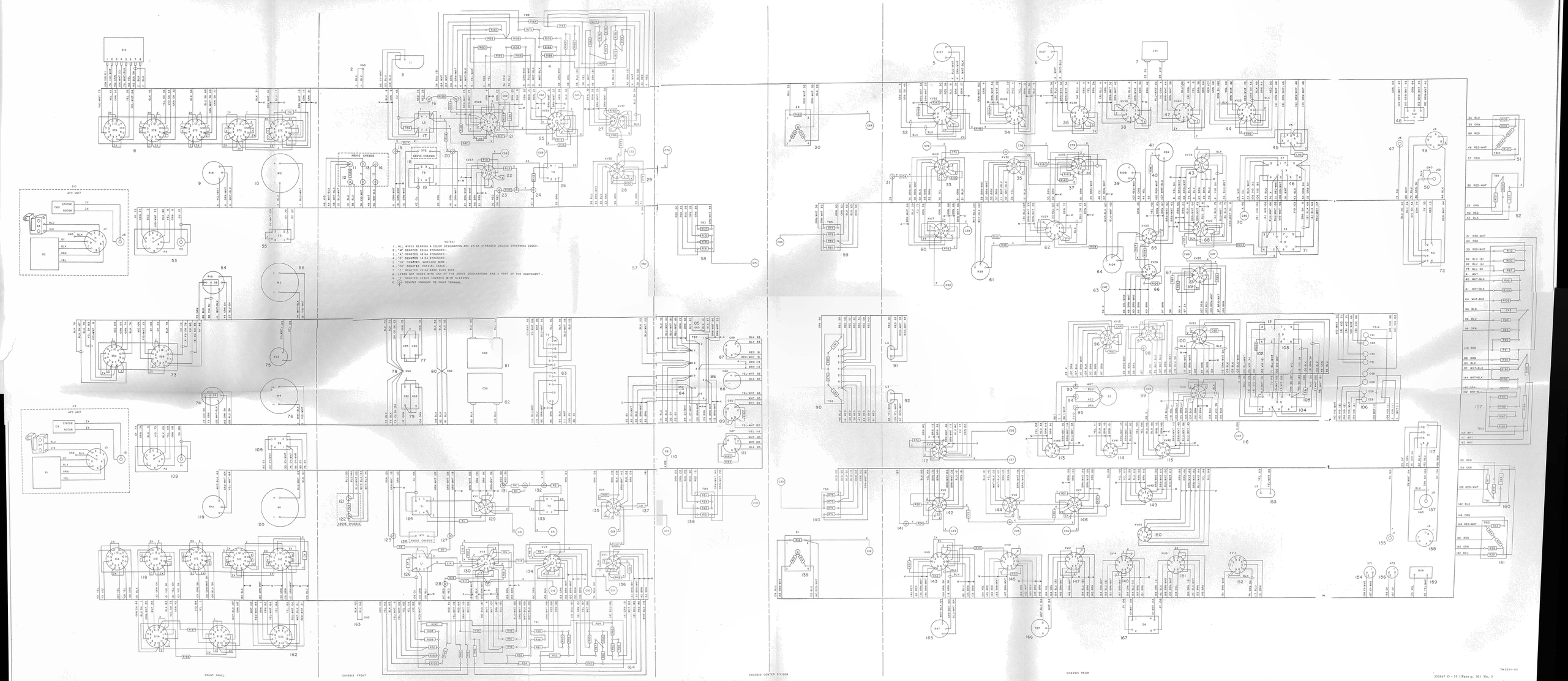

Figure 64. Cabling diagram, Frequency Shift Converter CV-116/URR.

INDEX

	Paragraphs	Page
Additional equipment required	10	7
Adjustments:		
Afc	63	68
Keyer	63	68
Relay	59	63
Afc:		
Adjustments	63	68
Discriminator	44	40
Lmiting amplifiers	43	39
Motor circuit	47	44
Operation	22*d*	16
Alinement:		
Discriminator	62	68
Procedures	61–63	67
Rf	61	67
Amplifier:		
Dc	46	43
Rf	37	27
Amplifiers:		
Afc limiting	43	39
Diversity limiting	40	29
Application of system	4	4
Band-pass filter tests	69	71
Block diagram:		
Complete	36	24
Simplified	4*b*	4
B+ circuits, checking for shorts	55	53
Chart, troubleshooting	56	53
Circuit theory	36–50	24
Coils, dc resistances	54	52
Components, table	7	5
Connections	8*c*, 11, 14	5, 8
Controls	8*d*, 16, 17	5, 12
Crystal-controlled oscillator operation	22*b*	16
Dc:		
Amplifier stages	46	43
Resistance of transformers and coils	54	52
Demolition of materiel to prevent enemy use	73, 74	74
Description	3–10	3
Destruction, methods of	74	74
Discriminator:		
Afc	44	40
Alinement	61	67
Diversity	41	32
Final testing	68	70
Diversity discriminators	41	32
Diversity-limiting amplifiers	40	29
Diversity theory	36*a*	24
Field maintenance instructions	51–57	51
Final testing	64–71	69
Band-pass filter	69	71
Discriminator	68	70
Limiter	67	70
Overall transmission	71	73
Rf circuit	66	69
Threshold control	70	71
Forms	2	3
Frequency-shift method of communication	36*a*	24
Initial adjustment	19	14
Installation	13	8
Instruments	16, 17	12
Keyer:		
Adjustments	63	68
Circuit theory	42	36
Limited storage, repacking for	72	74
Limiting amplifiers:		
Afc	43	39
Diversity	40	29
Final testing	67	70
Loop current adjustment	19*b*	15
Lubrication	32, 33	22
Maintenance:		
Desert	34*d*	22
Field instructions	51–57	51
Instructions	28–35	18
Preventive	28–31	18
Test equipment required for field	53	52
Tropical	34*b*	22
Winter	34*c*	22
Metering circuits	50	48
Methods of destruction	74	74
Mixer stage	39	28
Motor circuit	47	44
Motor drive circuit	47	44
Neutral system of tty operation	36*a*	24
Operating instructions	11–27	8
Operation:		
In arctic climates	25	17
In desert climates	27	17
In tropical climates	26	17
Types of	22	15
Under unusual conditions	24–27	17
Under usual conditions	20–23	15
Operational test procedures	57	53

	Paragraphs	Page
Oscillator	38	27
Overall transmission tests	71	73
Packaging data	6	5
Painting	35	22
Parts, replacement	58	57
Performing preventive maintenance	31	18
Placement of equipment	11	8
Power supply circuit	49	48
Preliminary starting procedures	20	15
Presetting	18	14
Preventive maintenance:		
Definition	28	18
General techniques	29	18
Performing	31	18
Use of forms	30	18
Purpose of converter	3	3
Records	2	3
Refinishing	60	67
Relay adjustments	59	63
Repairs	58–60	57
Replacement of parts	58	57
Resistance, dc, of transformers and coils	54	52
Rf:		
Alinement	61	67
Amplifier	37	27
Circuit, final testing	66	69
Running spares	9	5
Rustproofing	35	22
Sampler circuit	45	42
Scope	1	3
Service upon receipt of converter	11–15	8
Service upon receipt of used or reconditioned equipment	15	11
Shift reference circuit	45	42
Shipment, repacking	72	74
Spares, running	9	5
Starting procedures	21	15
Stopping procedures	23	17
Storage, repacking	72	74
System application	4	4
Table of components	7	5
Technical characteristics	5	4
Test equipment:		
For field maintenance	53	52
For final testing	65	69
Test procedures, operational	57	53
Testing, final	64–71	69
Theory, circuit	36–50	24
Threshold control circuit:		
Final testing	70	71
Theory	48	47
Transformers, dc resistance	54	52
Transmission tests, overall tests	71	73
Troubleshooting:		
Chart	56	53
Data	52	52
Procedures	51	51
Types of operation	22	15
Uncrating, unpacking, and checking new equipment	12	8
Use of converter	3	3
Vfo operation	22*c*	16
Weatherproofing	34	22

[AG 413.44 (16 Dec 54)]

By order of the Secretary of the Army:

M. B. RIDGWAY,
General, United States Army,
Chief of Staff.

Official:
JOHN A. KLEIN,
Major General, United States Army,
The Adjutant General.

Distribution:
Active Army:

Tec Svc, DA (1)
Tec Svc Bd (1)
CONARC (5)
CONARC Bd (incl ea Test Sec) (1)
Army AA Comd (2)
OS Maj Comd (5)
OS Base Comd (5)
Log Comd (5)
MDW (1)
Armies (5)
Corps (2)
Tng Div (2)
Ft & Cp (2)
Gen & Br Svc Sch (5)
SigC Sch (25)
Gen Depots (2)
SigC Sec, Gen Depots (10)
SigC Depots (20)
POE (2)
OS Sup Agencies (2)
SigC Fld Maint Shops (3)
SigC Lab (5)
Mil Dist (1)
Units organized under following TOE's:
11–127, Sig Rep Co (2)
11–128A, Sig Depot Co (2)
11–500A (AA–AE), Sig Svc Org (2)
11–587A, Sig Base Maint Co (2)
11–592A, Hq & Hq Co, Sig Base Depot (2)
11–597A, Sig Base Depot Co (2)

NG: None.
USAR: None.
Unless otherwise noted, distribution applies to ConUS and overseas.
For explanation of abbreviations used, see SR 320–50–1.

☆ U. S. GOVERNMENT PRINTING OFFICE : 1955 O - 333667

FREQUENCY SHIFT CONVERTERS CV-116/URR, CV-116A/URR, CV-116B/URR AND CV-116C/URR

TM 11-2241
TO 31R1-2URR-201
CHANGES No. 5

DEPARTMENTS OF THE ARMY
AND THE AIR FORCE
WASHINGTON 25, D.C., *15 May 1963*

TM 11-2241/TO 31R1-2URR-201, 28 March 1955, is changed as follows:

Page 3, paragraph 1. Add subparagraph *c* after subparagraph *b*:

c. Official nomenclature followed by (*) is used to indicate all models of the equipment covered in this manual. Thus, Frequency Shift Converter CV-116(*)/URR represents Frequency Shift Converters CV-116/URR, CV-116A/URR, CV-116B/URR and CV-116C/URR.

Add paragraph 1.1 after paragraph 1:

1.1 Index of Publications

Refer to the latest issue of DA Pam 310-4 to determine whether there are new editions, changes, or additional publications pertaining to your equipment. DA Pam 310-4 is a current index of technical manuals, technical bulletins, supply bulletins, lubrication orders, and modification work orders that are available through publications supply channels. The index lists the individual parts (-10, -20, -35P, etc.) and the latest changes and revisions of each equipment publication.

Paragraph 2. Delete paragraph 2 and substitute:

2. Forms and records

a. Report of Maintenance and Unsatisfactory Equipments. Use equipment forms and records in accordance with instructions in TM 38-750.

b. Report of Damaged or Improper Shipment. Fill out and forward DD Form 6 (Report of Damaged or Improper Shipment) as prescribed in AR 700-58 (Army), NAVSANDA Publications 378, and AFR 71-4 (Air Force).

c. Comments on Manual. Forward all other comments on this publication direct to: Commanding Officer, U.S. Army Electronics Materiel Support Agency, ATTN: SELMS-MP, Fort Monmouth, New Jersey. (DA Form 1598 (Record of Comments on Publications), DA Form 2496 (Disposition Form), or letter may be used.)

Page 18. Delete section I and substitute:

Section I. PREVENTIVE MAINTENANCE SERVICES

28. Preventive Maintenance Techniques

Preventive maintenance is the systematic care, servicing, and inspection of equipment to prevent the occurrence of trouble, to reduce downtime, and to assure that the equipment is serviceable.

a. Systematic Care. The procedures given in paragraph 30 cover systematic care essential to proper upkeep and operation of the equipment. The cleaning operations (par. 30.1*a* through *d*) should be performed once a day. If the equipment is not used daily, however, the cleaning operations must be performed before operation after any extended shutdown, or once a week while the equipment is kept in *standby* condition. The other items must be checked before the equipment is placed in operation after a shutdown, during operation, or after it is turned off, as specified in the applicable paragraph.

b. Maintenance Service and Inspection. The maintenance service and inspection charts (pars. 30 and 31.1) outline inspections to be made at specific intervals. These inspections are designed to maintain Army equipment in a combat serviceable condition; that is, in good general (physical) condition, and in good operating condition. To assist operators in maintaining combat serviceability, the charts indicate what to inspect, how to inspect, and what the normal conditions are; the *Reference* column lists the paragraph or figure that contains additional information. If the defect cannot be

remedied by the operator, higher echelon maintenance or repair is required. Records and reports of these inspections must be made in accordance with TM 38-750.

29. Maintenance Service and Inspection Periods

Maintenance service and inspection of the CV-116(*)/URR is required on a daily basis. Paragraph 30 specifies services and inspections that must be accomplished daily and under special conditions listed below.

a. When the equipment is initially installed.

b. When the equipment is reinstalled after removal for any reason.

c. At least once each week if the equipment is maintained in a standby condition.

30. Daily Maintenance Service and Inspection Chart

Item No.	Procedure		References
	Item	Normal indication or result	
1	COMPLETENESS: Inspect the equipment for completeness.	The equipment is complete	Pars. 7 and 9.
2	CLEANLINESS: Inspect the equipment for cleanliness.	The equipment is clean and free of dust and dirt.	Pars. 30.1*a* through *d*.
3	ITEMS BROKEN OR MISSING: Inspect for missing knobs, broken, loose, or missing meter windows.	Screws, or knobs are not missing, and meter windows are not broken, loose, or missing.	Figs. 1 and 8.
4	EXTERNAL CABLE AND CORDS: Inspect the external cable and cords for cuts, broken insulation, bad bruises or kinks.	The external cable and cords are not cut, nor is the insulation broken, bruised, or kinked.	Fig. 1.
5	EXTERNAL ELECTRICAL PLUGS AND RECEPTACLES: Check the external electrical plugs and receptacles for breakage and firm seating.	The external electrical plugs and receptacles are not broken and they are firmly seated.	Figs. 1 and 9.
6	CONTROLS FOR MANUAL OPERATION: Turn the controls for evidence of binding or scraping.	The controls turn smoothly and there is no evidence of binding or scraping.	Figs. 1 and 8.
7	INSPECT ACCESSIBLE ITEMS FOR LOOSENESS: Check items, such as switches, jacks, connectors, and knobs for looseness.	Switches, jacks, connectors, and knobs are not loose.	Figs. 8, and 9.
8	NORMAL OPERATION: Check as part of a systems operation.	The system functions properly when the component is used as part of a complete system.	Pars. 20 through 23.

30.1. Cleaning

Inspect the exterior of the component. The exterior surfaces should be clean, free of dust, dirt, grease, and fungus.

a. Remove dust and loose dirt with a clean soft cloth.

Warning: **Cleaning compound is flammable and its fumes are toxic. Provide adequate ventilation. *Do not* use near a flame.**

b. Remove grease, fungus, and ground-in dirt from the cases; use a cloth dampened (not wet) with cleaning compound.

c. Remove dust or dirt from plugs and jacks with a brush.

Caution: **Do not press on the meter faces (glass) when cleaning; the meter may be damaged.**

d. Clean the front panels, meters, and control knobs; use a soft clean cloth. If dirt is difficult to remove, clean with mild soap and water.

e. Clean rust and corrosion from metal surfaces by lightly sanding them with fine sandpaper. Brush two thin coats of paint on the bare metal to protect it from further corrosion. Refer to the applicable cleaning and refinishing practices specified in TM 9-213.

31. Monthly Maintenance

Perform the maintenance functions indicated in the maintenance and inspection chart (par. 31.1) once each month. A month is defined as approximately 30 calendar days of 8-hour-per-day operation. If the equipment is operated 16 hours a day,

the monthly maintenance should be performed at 15-day intervals. Adjustment of the maintenance interval must be made to compensate for any unusual operating conditions. Equipment maintained in a standby (ready for immediate operation) condition, must have monthly maintenance performed on it. Equipment in limited storage (requires service before operation) does not require monthly maintenance.

31.1. Monthly Maintenance Service and Inspection Chart

Item No.	Procedure		References
	Item	Normal indication or result	
1	COMPLETENESS: Inspect the equipment for completeness.	The equipment is complete	Pars. 7 and 9.
2	CLEANLINESS: Inspect the equipment for cleanliness.	The equipment is clean and free of dust and dirt.	Par. 30.1.
3	ITEMS BROKEN OR MISSING: Inspect for missing knobs, broken, loose, or missing meter windows.	Screws or knobs are not missing, and meter windows are not broken, loose, or missing.	Figs. 1 and 8.
4	EXTERNAL CABLE AND CORDS: Inspect the external cable and cords for cuts, broken insulation, bad bruises or kinks.	The external cable and cords are not cut, nor is the insulation broken, bruised, or kinked.	Fig. 1.
5	EXTERNAL ELECTRICAL PLUGS AND RECEPTACLES: Check the external electrical plugs and receptacles for breakage and firm seating.	The external electrical plugs and receptacles are not broken and they are firmly seated.	Figs. 1 and 9.
6	CONTROLS FOR MANUAL OPERATION: Turn the controls for evidence of binding or scraping.	The controls turn smoothly and there is no evidence of binding or scraping.	Figs. 1 and 8.
7	INSPECT ACCESSIBLE ITEMS FOR LOOSENESS: Check items, such as switches, jacks, connectors, and knobs for looseness.	Switches, jacks, connectors, and knobs are not loose.	Figs. 8 and 9.
8	NORMAL OPERATION: Check as part of a systems operation.	The system functions properly when the component is used as part of a complete system.	Pars. 20 through 23.
9	FAN MOTOR: See that fan motor B3 operates.	Fan motor B3 operates and air is felt blowing from the air exit hole at the top of the case.	Fig. 45.
10	ACCESSIBLE PLUCKOUT ITEMS: Inspect accessible pluckout items for good seating.	Tube shields, tubes, fuses, and crystal holders are correctly seated.	Fig. 45.
11	PRESERVATION: Inspect case for rust or corrosion.	Cases does not have bare spots, rust spots, nor is there any evidence of corrosion.	Par. 30.1*e*.
12	RESISTORS, BUSHINGS, AND INSULATORS: Inspect for cracks, chipping, blistering, and discoloration.	Resistors, bushings, and insulators are not chipped, blistered, or discolored.	Fig. 46.
13	RELAYS: Check for loose mountings, bad contacts, misalignment of contacts and spring, and proper spring tension.	Relays K1 and K2 are firmly mounted and there are no bad contacts, and the spring tension is correct.	Par. 59*b*. Fig. 46.
14	LARGE CAPACITORS: Check for electrolyte leakage, loose capacitors, dirt, and insecure mountings.	The electrolytic capacitors do not bulge, or show signs of leakage. They are clean and securely mounted.	Fig. 46.
15	OVERHEATING: Inspect transformers, chokes, potentiometers, coils, and fan motor for evidence of overheating.	There is no evidence of overheating of transformers, coils, chokes, fan motor, or potentiometers.	Figs. 45 and 46.
16	PUBLICATIONS: See that pertinent publications are available.	Manual must be complete and in usable condition without pages missing. All changes pertinent to the equipment are on hand.	DA Pam 310-4 for requirements.
17	MODIFICATION WORK ORDERS: Check to determine if new applicable MWO's have been published.	All URGENT MWO's have been applied to the equipment. All ROUTINE MWO's have been scheduled.	DA Pam 310-4 for MWO's.

31.1. Monthly Maintenance Service and Inspection Chart—Continued

Item No.	Procedure		References
	Item	Normal indication or result	
18	LUBRICATION: Perform a complete lubrication of the equipment.	A minimum amount of lubrication is required. There should be no evidence of overlubrication.	Par. 32.

Page 19. Delete figure 11.
Page 20. Delete figure 12.

Page 30. Delete figure 18 and substitute new figure 18.

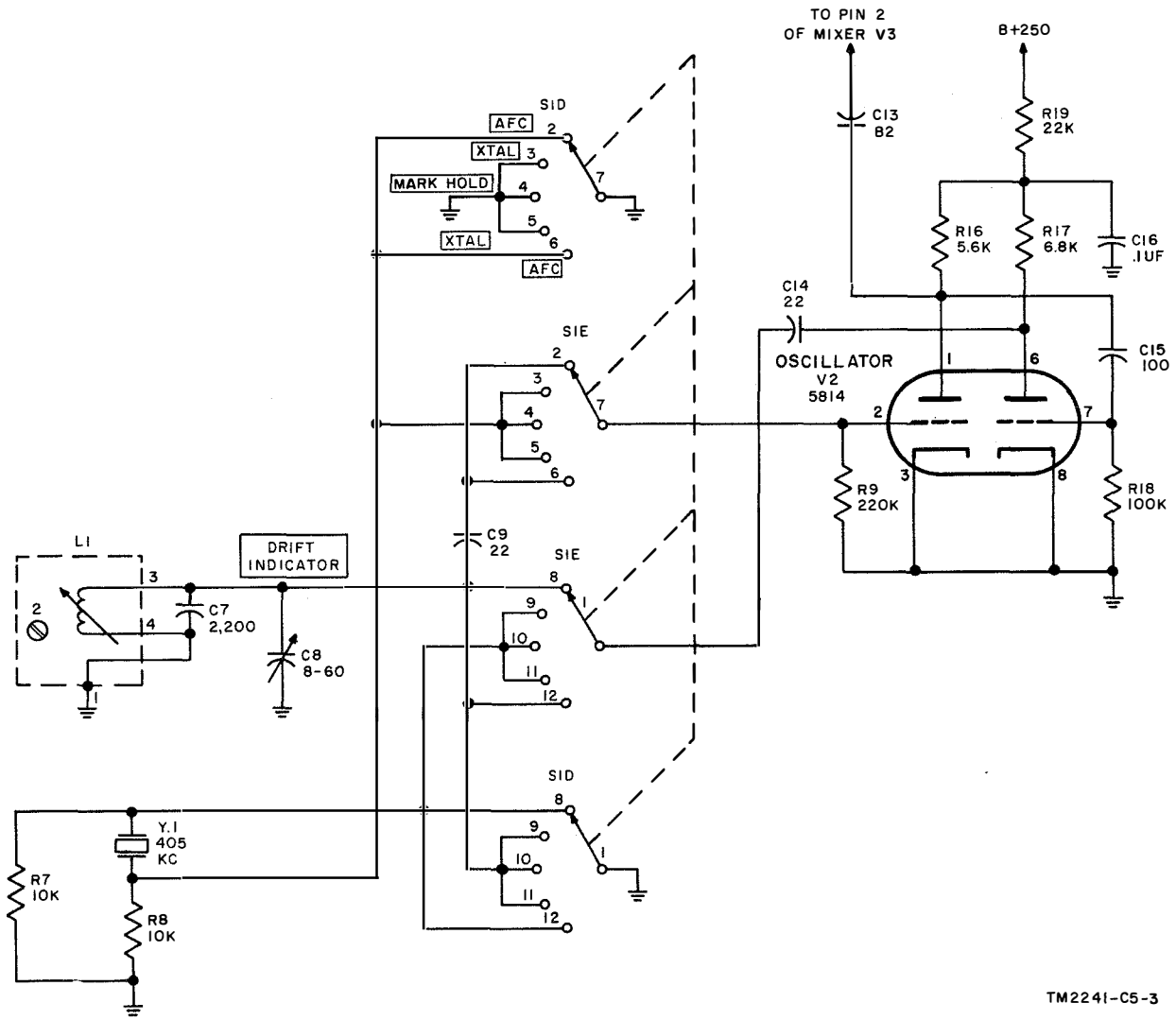

Figure 18. Switch S1 circuits for selecting variable-frequency or crystal-oscillator operation.

Page 69. Add section III.1 after section III.

Section III.1. FOURTH ECHELON TESTING PROCEDURES

63.1. General

a. Testing procedures are prepared for use by Signal Field Maintenance Shops and Signal Service Organizations responsible for fourth echelon maintenance to determine the acceptability of repaired signal equipment. These procedures prescribe specific requirements that repaired signal equipment *must* meet before it is returned to the using organization. The procedures may also be used as a guide for testing equipment repaired at third echelon if the proper tools and test equipments are available. A summary of the performance standards is given in paragraph 63.6.

b. Each test depends on the preceding one for certain operating procedures and, where applicable, for test equipment calibrations. Comply with the instructions preceding the chart before proceeding to the chart. Perform each test in sequence. *Do not vary the sequence.* For each step, perform all the actions required in the *Control settings* columns; then perform each specific test procedure and verify it against its performance standard.

63.2. Test Equipment, Materials, and Other Equipment Required

All test equipment, materials, and other equipment required to perform the tests given in this section are listed in the charts in *a* and *b* below, and are authorized under TA 11-17 (Signal Field Maintenance Shops) and TA 11-100 (11-17) (Allowances of Signal Corps Expendable Supplies for Signal Field Maintenance Shop, Continental United States), or TOE 11-158D (Signal Depot Company) and TA 11-101 (11-158) (Allowances of Signal Corps Expendable Supplies for Signal Depot Company); or they are repair part items of the subject equipment authorized for stockage at fourth echelon levels.

a. Test Equipment.

Nomenclature	Federal stock No.	Technical reference
Multimeter ME-26(*)/U [a].	6625-542-6407	TM 11-6625-200-12
RF Signal Generator AN/URM-25F.	6625-570-5719	TM 11-5551E
Frequency Meter AN/USM-26.	6625-692-6553	TM 11-5057
Multimeter TS-352-(*)/U [b].	6625-242-5023	TM 11-5527

[a] Indicates Multimeters ME-26/U and ME-26B/U.
[b] Indicates Multimeters TS-352/U, TS-352A/U, and TS-352B/U.

b. Other Equipment.

Nomenclature	Federal stock No.	Technical reference
Cable Assembly, Power, Electrical CX-2491/U.	5995-549-7480	TM 11-2241
Resistor, fixed, composition 120 ohms, 2 watts ±5%.	5905-171-2063	None.
Resistor, fixed, composition 510 ohms, 2 watts +5% [a].	5905-171-2027	None.
Transformer CN-16(*)/U [b].	5950-235-2086	None.

[a] A 500 ohm, 2 watt fixed resistor is more desirable, if available.
[b] Indicates Transformers CN-16/U and CN-16A/U, and Transformer, Variable Power CN-16B/U.

63.3. Physical Tests and Inspection

a. Test Equipment and Materials. None.
b. Test Connections and Conditions. None.
c. Test Procedure.

Step No.	Control settings		Test procedure	Performance standard
	Test equipment	Equipment under test		
1	None	Controls may be in any position.	*a.* Check all switches for smooth operation throughout their respective limits of travel.	*a.* Controls should operate freely without binding, be properly indexed, and have positive detent action.

63.3. Physical Tests and Inspection—Continued

Step No.	Control settings		Test procedure	Performance standard
	Test equipment	Equipment under test		
			b. Inspect all connectors, fuses, and the pilot lamp, for damage, missing parts, or incorrect fuse ratings. Inspect case, front and rear, for missing screws, nuts, or bolts.	*b.* None of listed items should be missing or damaged. Fuses will have correct rating of 3 amperes.
			c. Inspect unit, front and rear, top and bottom, for physical damage (dents, punctures, cracked glass, or bent areas).	*c.* There should be no dents, punctures, broken glass, or bent areas.
			d. Inspect unit for condition of finish and panel markings. *Note.* Touchup painting is recommended instead of refinishing whenever practicable. Screwheads, receptacles, and carrying handles will not be painted or polished with abrasives.	*d.* Surfaces intended to be painted should not show bare metal. Panel markings should be legible.

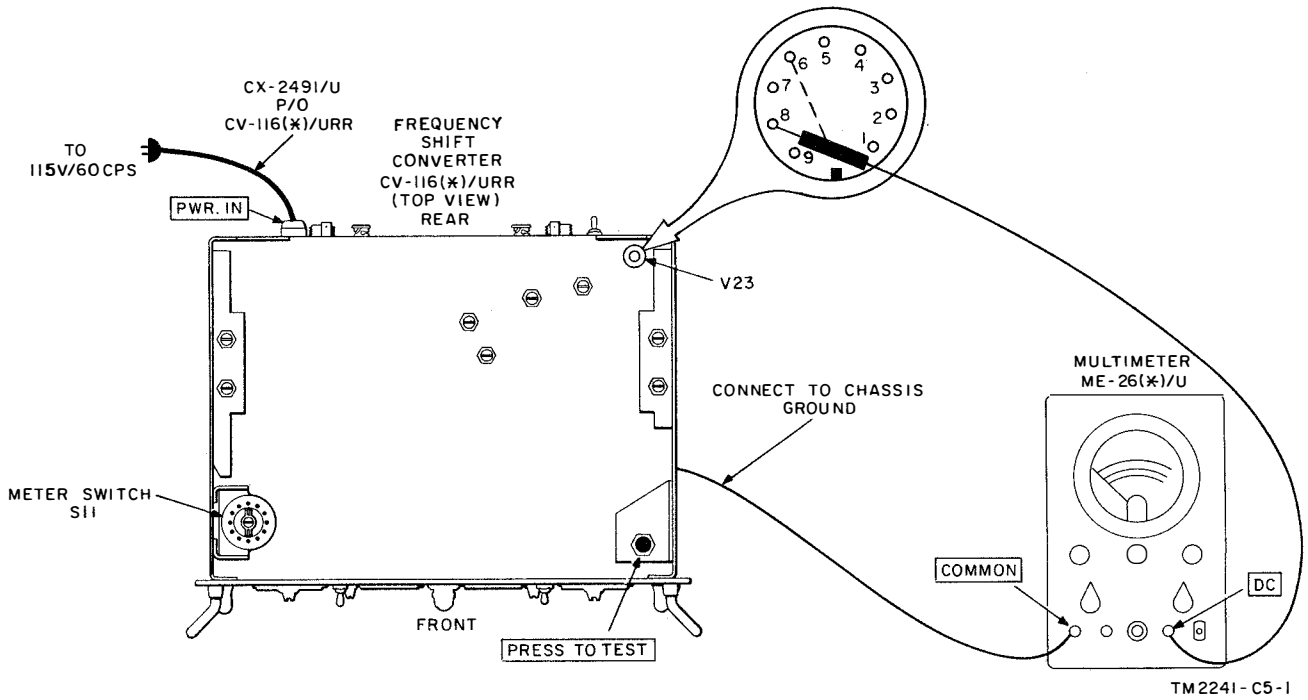

Figure 52.1. Frequency Shift Converter CV-116(*)/URR power supply test.

63.4. Power Supply Tests

a. Test Equipment and Materials.

Multimeter ME-26(*)/U.

Cable Assembly, Power, Electrical CX-2491/U (p/o CV-116(*)/URR).

b. Test Connections and Conditions. Remove the CV-116(*)/URR from the case; remove electron tube V23 and connect the equipment as shown in figure 52.1.

c. Test Procedure.

Step No.	Control settings		Test procedure	Performance standard
	Test equipment	Equipment under test		
1	*ME-26(*)/U* FUNCTION: − RANGE: 300 V	POWER: ON Meter Switch: B− Other switches and controls may be in any position.	*a.* Observe ME-26(*)/U meter indication *b.* Remove ME-26(*)/U DC probe from CV-116(*)/URR, and depress CV-116(*)/URR PRESS TO TEST button. Observe CHANNEL A DISCRIMINATOR meter indication.	*a.* Will indicate 280 ±14 volts. *b.* Will indicate 81 microamperes ±8, to the left.
2	Same as step 1, except: *ME-26(*)/U* FUNCTION: +	Same as step 1, except: Meter Switch: B+	*a.* Connect equipment as indicated by dotted line in figure 52.1 *b.* Observe ME-26(*)/U meter indication *c.* Remove ME-26(*)/U DC probe from CV-116(*)/URR, and depress CV-116(*)/URR PRESS TO TEST button. Observe CHANNEL A DISCRIMINATOR meter indication.	*a.* None. *b.* Will indicate 250 ±25 volts. *c.* Will indicate 73 microamperes ±8, to the right.

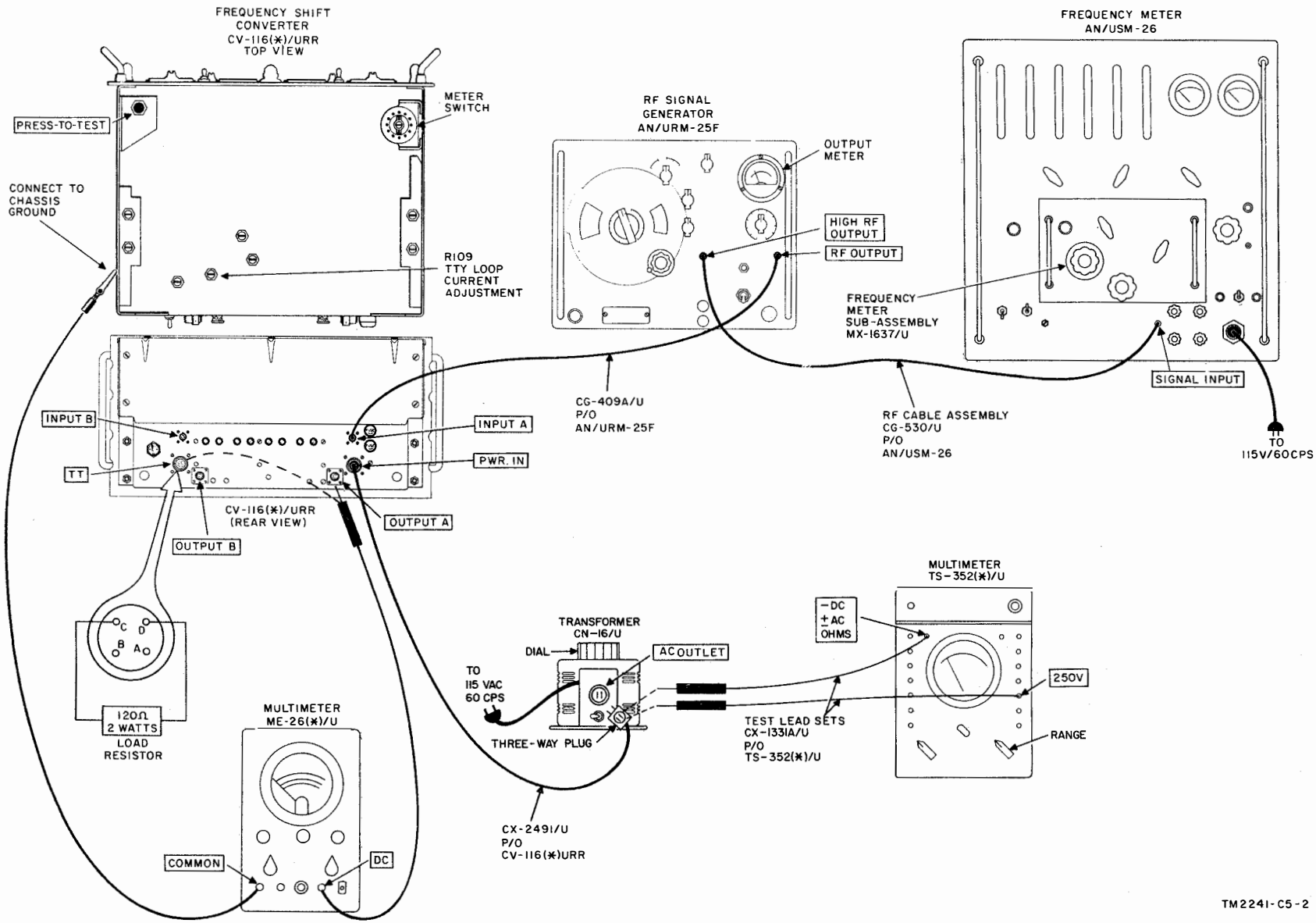

Figure 52.2. Frequency Shift Converter CV-116(*)/URR performance tests.

63.5. Output Range, Metering Circuits, Signal Input Meter, Discriminator Meter, Discriminator Linearity, and A. F. C. Tests

a. Test Equipment and Materials.

Multimeter ME-26(*)/U.
Multimeter TS-352(*)/U.
Transformer CN-16(*)/U.
Signal Generator AN/URM-25F.
Frequency Meter AN/USM-26.
Cable Assembly, Power, Electrical CX-2491/U (p/o CV-116(*)/URR).
Resistor, fixed, 120 ohms, 2 watts.
Resistor, fixed, 510 ohms, 2 watts.
Cord CG-409A/U (p/o AN/URM-25F).
RF Cable Assembly CG-530/U (p/o AN/USM-26).

b. Test Connections and/or Conditions. Connect the equipment as shown in figure 52.2. In order to enable connections to the CN-16(*)/U, pull out the plug on the CX-2491/U slightly, and make connections with Test Lead Set CX-1331A/U test leads (p/o TS-352(*)/U).

c. Test Procedure.

Step No.	Control settings: Test equipment	Control settings: Equipment under test	Test procedure	Performance standard
1	*ME-26(*)/U* FUNCTION: + RANGE: 3V *TS-352(*)/U* FUNCTION: AC VOLTS *CN-16(*)/U* ON-OFF: ON Dial: Fully counterclockwise *AN/URM-25F* BAND SWITCH: 220-600 TUNING: 455 kilocycles FUNCTION SWITCH: CW SET RF OUTPUT: Fully counterclockwise MICROVOLTS control: Fully clockwise ATTENUATOR: 3K POWER: ON *AN/USM-26* (a) DISPLAY TIME: Fully counterclockwise Power switch: ON 100KC STANDARD INT. EXT.: INT. FUNCTION SELECTOR: FREQUENCY FREQUENCY unit: 1 TIME unit: 100KC (b) *MX-1637/U* MIXINGFREQUENCY MCS: 0 GAIN: MIN	Meter switch: R109 CHANNEL SELECTOR: A POWER: OFF AFC: OFF *CHANNEL A section* AFC SHIFT ADJUSTMENT: 0 AFC THRESHOLD LEVEL: OFF DRIFT INDICATOR: 0 AFC-XTAL-MARK HOLD: MARK HOLD *CHANNEL B section* AFC SHIFT ADJUSTMENT: 0 AFC THRESHOLD LEVEL: OFF DRIFT INDICATOR: 0 AFC-XTAL-MARK HOLD: MARK HOLD *Note.* When testing CV-116C/URR, place loop supply switch to INT.	*a.* Rotate CN-16(*)/U dial clockwise until TS-352(*)/U indicates 115 volts on the 0-2.5 red AC scale. *b.* Set CV-116(*)/URR POWER switch at ON *c.* Rotate AN/URM-25F SET RF OUTPUT control clockwise until output meter pointer indicates in red arc. *d.* Rotate AN/USM-26 GAIN control clockwise until *tuning eye* indicates minimum shadow. *e.* Adjust AN/URM-25F TUNING control to 455 kc ±10 cycles as indicated on AN/USM-26. *f.* Depress CV-116(*)/URR PRESS TO TEST button, and adjust R109 TTY LOOP CURRENT ADJUSTMENT for a CHANNEL A DISCRIMINATOR meter indication of 60 microamperes. *g.* Rotate CN-16(*)/U dial clockwise until TS-352(*)/U indicates 127 volts on 0-2.5 red AC scale. Repeat step *f* above. *h.* Rotate CN-16(*)/U dial counterclockwise until TS-352(*)/U indicates 103 volts on 0-2.5 red AC scale. Place CN-16(*)/U ON-OFF switch at OFF. *i.* Replace 120-ohm, 2-watt load resistor with a 510-ohm, 2-watt load resistor, and place CN-16(*)/U ON-OFF switch at ON. *j.* Repeat steps *f*, *a*, and *f* above, in order given	*a.* None. *b.* None. *c.* None. *d.* None. *e.* None. *f.* Meter will indicate 60 microamperes ±6. *g.* Same as step *f* above. *h.* None. *i.* None. *j.* Same as steps *f* and *a* above.
2	All controls remain as last indicated in test procedure.	Same as step 1, except: CHANNEL SELECTOR: B	*a.* Remove CG-409A/U from CV-116(*)/URR INPUT A jack, and connect cable to INPUT B jack as indicated by dotted line in figure 52.2. *b.* Replace 500-ohm, 2-watt load resistor with a 125-ohm, 2-watt load resistor. *c.* Repeat steps 1*b* and *f* through *j* above *d.* Remove CG-409A/U from CV-116(*)/URR input B jack, and connect cable to INPUT A jack.	*a.* None. *b.* None. *c.* Same as steps *b* and *f* through *j*. *d.* None.
3	All controls remain as last indicated in test procedure.	Same as step 1, except: Meter switch: A+B POWER ON-OFF: ON *CHANNEL A section* AFC-XTAL-MARK HOLD: XTAL left	*a.* Depress CV-116(*)/URR PRESS TO TEST button and observe CHANNEL A, DISCRIMINATOR meter indication. *b.* Rotate CV-116(*)/URR meter switch to R94 position, and repeat step *a* above.	*a.* Will indicate zero. *b.* Same as step *a* above.
4	All controls remain as last indicated in test procedure.	All controls remain as last indicated in test procedure.	*a.* Adjust AN/URM-25F MICROVOLTS control until CV-116-(*)/URR CHANNEL A SIGNAL INPUT meter indicates half-scale deflection. *b.* Observe AN/URM-25F output meter indication *Note.* It may be necessary to place AN/URM-25F ATTENUATOR control to 1K position, and repeat step *a* above to obtain an on-scale meter indication. *c.* Observe CV-116(*)/URR CHANNEL A DISCRIMINATOR meter indication. *d.* Place AN/URM-25F MICROVOLTS control fully clockwise and ATTENUATOR control to 100K position. Readjust SET RF OUTPUT TO RED ARC and observe CV-116(*)/URR CHANNEL A SIGNAL INPUT meter. *e.* Repeat step *c* above *f.* Place AN/URM-25F ATTENUATOR control to 10K position. Readjust SET RF OUTPUT TO RED ARC and rotate MICROVOLTS control counterclockwise until output meter indicates 5 on the upper scale. *g.* Observe ME-26(*)/U meter indication *Note.* It may be necessary to place ME-26(*)/U FUNCTION switch to −position in order to obtain an on-scale reading. *h.* Place CV-116(*)/URR CHANNEL A, AFC-XTAL-MARK HOLD switch to XTAL right. *i.* Repeat steps *c* and *g* above *j.* Adjust AN/URM-25F TUNING control to output frequency of approximately 455,425 cycles as indicated on AN/USM-26. *k.* Place CV-116(*)/URR CHANNEL A, AFC-XTAL-MARK HOLD switch to AFC left, and then to MARK HOLD. Observe CV-116(*)/URR CHANNEL A DISCRIMINATOR meter in each position. *l.* Place CV-116(*)/URR CHANNEL A AFC-XTAL-MARK HOLD switch to AFC right, and then to XTAL right. Observe CV-116(*)/URR CHANNEL A DISCRIMINATOR meter in each position. *m.* Adjust AN/URM-25F TUNING control to output frequency of approximately 454,575 cycles as indicated on AN/USM-26. *n.* Repeat steps *k* and *l* above	*a.* None. *b.* Will indicate from 400 to 1,400 microvolts. *c.* Will indicate 0 microamperes ±5. *d.* Will indicate at least 60 microamperes. *e.* Same as step *c* above. *f.* None. *g.* Will indicate 0 volts ±1.2 DC. *h.* None. *i.* Same as steps *c* and *g* above. *j.* None. *k.* Will indicate deflections in the same direction. *l.* Will indicate deflection in the same direction but opposite of that observed in step *k* above. *m.* None. *n.* Same as *k* and *l* above.
5	All controls remain as last indicated in test procedure.	Same as step 1, except: Meter switch: A+B POWER ON-OFF: ON *CHANNEL A section* AFC-XTAL-MARK HOLD: XTAL left	*a.* Note and record CV-116(*)/URR CHANNEL A DISCRIMINATOR meter. *b.* Depress CV-116(*)/URR PRESS TO TEST button. Note and record CHANNEL A DISCRIMINATOR meter. *c.* Place CV-116(*)/URR CHANNEL A, AFC-XTAL-MARK HOLD switch to XTAL right and repeat steps *a* and *b* above. *d.* Adjust AN/URM-25F TUNING control to output frequency of approximately 455,425 cycles. *e.* Repeat step *a* above *f.* Depress CV-116(*)/URR PRESS TO TEST button, and observe CHANNEL A DISCRIMINATOR meter. *g.* Place CV-116(*)/URR CHANNEL A AFC-XTAL-MARK HOLD switch to XTAL left and repeat step *a* above. *h.* Depress CV-116(*)/URR PRESS TO TEST button, and observe CHANNEL A DISCRIMINATOR meter.	*a.* Will indicate 53 microamperes ±13. *b.* Will indicate 53 microamperes ±13. *c.* Same as *a* and *b* above. *d.* None. *e.* Will indicate within 10 microamperes of that recorded in *a* above. *f.* Will indicate within 10 microamperes of that recorded in *b* above. *g.* Will indicate within 10 microamperes of that recorded in *c*. *h.* Will indicate within 10 microamperes of that recorded in *c*.
6	All controls remain as last indicated in test procedure.	Same as step 1, except: Meter switch: R57 *Note.* When testing CHANNEL B, place meter switch in R167 position. POWER ON-OFF: ON AFC ON-OFF: ON *CHANNEL A section* AFC-XTAL-MARK HOLD: XTAL left.	*a.* Place AN/URM-25F ATTENUATION control to 3K position, and adjust MICROVOLTS control until 2 is indicated on microvolts (lower) scale of output meter. *b.* Rotate AN/USM-26 GAIN control until tuning eye indicates minimum shadow. *c.* Adjust AN/URM-25F TUNING control until 455KC ±10 cycles is indicated on AN/USM-26. *d.* Place CV-116(*)/URR CHANNEL A AFC-XTAL-MARK HOLD switch to AFC left. *e.* Depress CV-116(*)/URR PRESS TO TEST button, and observe CHANNEL A DISCRIMINATOR meter indication. *f.* Adjust CV-116(*)/URR CHANNEL A AFC SHIFT ADJUSTMENT until CHANNEL A DISCRIMINATOR meter indicates 5 microamperes. (Note direction of meter deflection.) *g.* Adjust CV-116(*)/URR CHANNEL A DRIFT INDICATOR until CHANNEL A DISCRIMINATOR meter indicates 15 microamperes, and release. (Meter deflection will be in same direction as in *f* above. *h.* Depress PRESS TO TEST button, adjust CV-116(*)/URR CHANNEL A DRIFT INDICATOR until CHANNEL A DISCRIMINATOR meter indicates 15 microamperes (in direction opposite to *f* above). *i.* Slowly adjust CV-116(*)/URR CHANNEL A AFC SHIFT ADJUSTMENT until CHANNEL A DISCRIMINATOR meter indicates 5 microamperes (Meter deflects in same direction as in *f* and *g* above) and release. *j.* Place CV-116(*)/URR AFC ON-OFF switch to OFF *k.* Place CV-116(*)/URR AFC SHIFT ADJUSTMENT and DRIFT INDICATOR controls to zero. *l.* Adjust CV-116(*)/URR DRIFT INDICATOR until CHANNEL A DISCRIMINATOR meter indicates 10 microamperes. (Meter deflects in the same direction as in *h* above.) *m.* Place CV-116(*)/URR AFC ON-OFF switch to ON *n.* Slowly rotate AN/URM-25F TUNING control clockwise until alarm circuit is actuated; be careful to keep CHANNEL A DISCRIMINATOR meter indication on scale. *o.* Observe frequency indicated on AN/USM-26	*a.* None. *b.* None. *c.* None. *d.* None. *e.* Will indicate approximately 1 microampere. *f.* AFC SHIFT ADJUSTMENT should indicate between 3 and 5. *g.* Meter will return to 5 microamperes. *h.* Meter will return to 5 microamperes. *i.* AFC SHIFT ADJUSTMENT should indicate between 5 and 6. *j.* None. *k.* None. *l.* None. *m.* *n.* Bell will ring. *o.* Will indicate at least 456.9 kc.
7	All controls remain as last indicated in test procedure.	Same as step 1, except: Meter switch: R167 POWER ON-OFF: ON CHANNEL SELECTOR: B *CHANNEL B section* AFC-XTAL-MARK HOLD: XTAL left.	*a.* Connect equipment as indicated by dotted lines in figure 52.2 *b.* Repeat step 1*e* above *c.* Repeat steps 4, 5, and 6 above, substituting CHANNEL B for CHANNEL A wherever indicated, except on steps 5*b*, 5*f*, 5*h*, and 6*e*.	*a.* None. *b.* None. *c.* Same as steps 4, 5, and 6.

63.6. Summary of Performance Standards

a. Power Supply.

B− ..... −280 ±14 VDC
B+ ..... +250 ±25 VDC

b. Output Range (Either Channel).

Line voltage	Load (ohms)	Output (milli-amperes)
115 VAC	500	60 ±6
115 VAC	125	60 ±6
127 VAC	125	60 ±6
103 VAC	500	60 ±6

c. Metering Circuits.

METERING switch position	CHANNEL A DISCRIMINATOR meter indication
R109	60 ±6
R57	Approximately 1
R167	Approximately 1
A+B	0
B+	+83 ±4
B−	−93 ±5
R94	0

d. Signal Input Meters.

Input signal freq/microvolts	Meter indication (microamperes)
455 KC ±10 cps/400-1400	Half-scale deflection
455 KC ±10 cps/100K	60 minimum

e. Discriminator Meters.

455KC ±10 cps input ..... 0 ±5 microamperes
455KC +425 cps input ..... deflection to right
455KC −425 cps input ..... deflection to left

f. Output Volts.

455KC ±10 cps ..... 0 ±1.2VDC

g. Discriminator Linearity.

Note. Discriminator meter readings must be symmetrical to within 10 microamperes.

Input signal freq/microvolts	Discriminator meter indication
455,425KC/5K	+53 ±13
454,575KC/5K	−53 ±13

h. Automatic Frequency Control.

(1) AFC SHIFT ADJUSTMENT should indicate approximately 4 and 5.5 when DISCRIMINATOR meter indicates 5 and 50 microamperes, respectively.

(2) Will lock in frequency with an error, as indicated on DISCRIMINATOR meter, up to 10 microamperes.

(3) Alarm sounds with loss of afc.

Page 74. Add the "APPENDIX" after chapter 7.

APPENDIX

REFERENCES

Following is a list of references applicable and available to the field and depot maintenance repairmen of Frequency Shift Converter CV-116(*)/URR:

TM 38-750	The Army Equipment Record System and Procedures.
TM 11-6625-200-12	Multimeter ME-26A/U and ME-26B/U.
TM 11-5551E	RF Signal Generator AN/URM-25F.
TM 11-5057	Frequency Meter AN/USM-26.
TM 11-5527	Multimeter TS-352/U; TS-352A/U; TS-352B/U.
TM 9-213	Painting, Instructions for Field Use.
DA PAM 310-4	Index of Technical Manuals, Technical Bulletins, Supply Bulletins, Lubrication Orders, and Modification Work Orders.

By Order of the Secretaries of the Army and the Air Force:

EARLE G. WHEELER,
General, United States Army,
Chief of Staff.

Official:
J. C. LAMBERT,
Major General, United States Army,
The Adjutant General.

CURTIS E. LEMAY,
Chief of Staff, United States Air Force.

Official:
R. J. PUGH,
Colonel, United States Air Force,
Director of Administrative Services.

Distribution:

Active Army:

DASA (6)
USASA (2)
CNGB (1)
CofEngrs (1)
TSG (1)
CSigO (7)
CofT (1)
USA CD Agcy (1)
USCONARC (5)
USAMC (5)
USAECOM (5)
USAMICOM (4)
ARADCOM (2)
ARADCOM Rgn (2)
OS Maj Comd (3)
OS Base Comd (2)
LOGCOMD (2)
MDW (1)
Armies (2)
Corps (2)
Div (2)
Instl (2) except
Ft Monmouth (63)
USATC AD (2)
USATC Armor (2)
USATC Engr (2)
USATC Inf (2)
USASTC (5)
Svc Colleges (2)
Br Svc Sch (2)
GENDEP (OS) (2)
Sig Sec, GENDEP (5)
Sig Dep (OS) (12)
Army Dep (2) except
Lexington (12)
Sacramento (28)
Tobyhanna (12)
Ft Worth (8)
1st GM Bde (5)
USAPRDC (5)
USMA (5)
Rock Island Arsenal (5)
USA Corps (3)
USA Elct RD Actv (Ft Huachuca) (2)
USA Elct RD Actv (White Sands) (13)
WRAMC (1)
Army Pic Cen (2)
USA Mbl Spt Cen (2)
USA Trans Tml Comd (1)
Army Tml (1)
POE (1)
USAOSA (1)
AFIP (1)
AMS (1)
USA Elct Mat Agcy (25)
Chicago Proc Dist (1)
USASCC (4)
USARCARIB Sig Agcy (1)
Sig Fld Maint Shops (3)
JBUSMC (2)
Units org under fol TOE's:
7-52 (2)
9-12 (2)
9-22 (2)
9-86 (2)
11-5 (2)
11-7 (2)
11-15 (2)
11-16 (2)
11-17 (2)
11-18 (2)
11-32 (2)
11-37 (2)
11-38 (2)
11-39 (2)
11-55 (2)
11-57 (2)
11-85 (2)
11-87 (2)
11-95 (2)
11-97 (2)
11-98 (2)
11-99 (2)
11-117 (2)
11-155 (2)
11-157 (2)
11-237 (2)
11-500 (AA-AC) (4)
11-557 (2)
11-587 (2)
11-592 (2)
11-597 (2)
17-51 (2)
17-55 (2)
29-56 (2)
30-25 (2)
30-29 (2)
30-500 (AA-AE) (2)
32-51 (2)
32-52 (2)
32-56 (2)
32-57 (2)
32-67 (2)
32-68 (2)
32-78 (2)
39-51 (2)
39-401 (2)
44-12 (2)

NG: State AG (3); units—same as active Army except allowance is one copy to each unit.
USAR: None.
For explanation of abbreviations used, see AR 320-50.

☆ U.S. Government Printing Office: 1963—650511