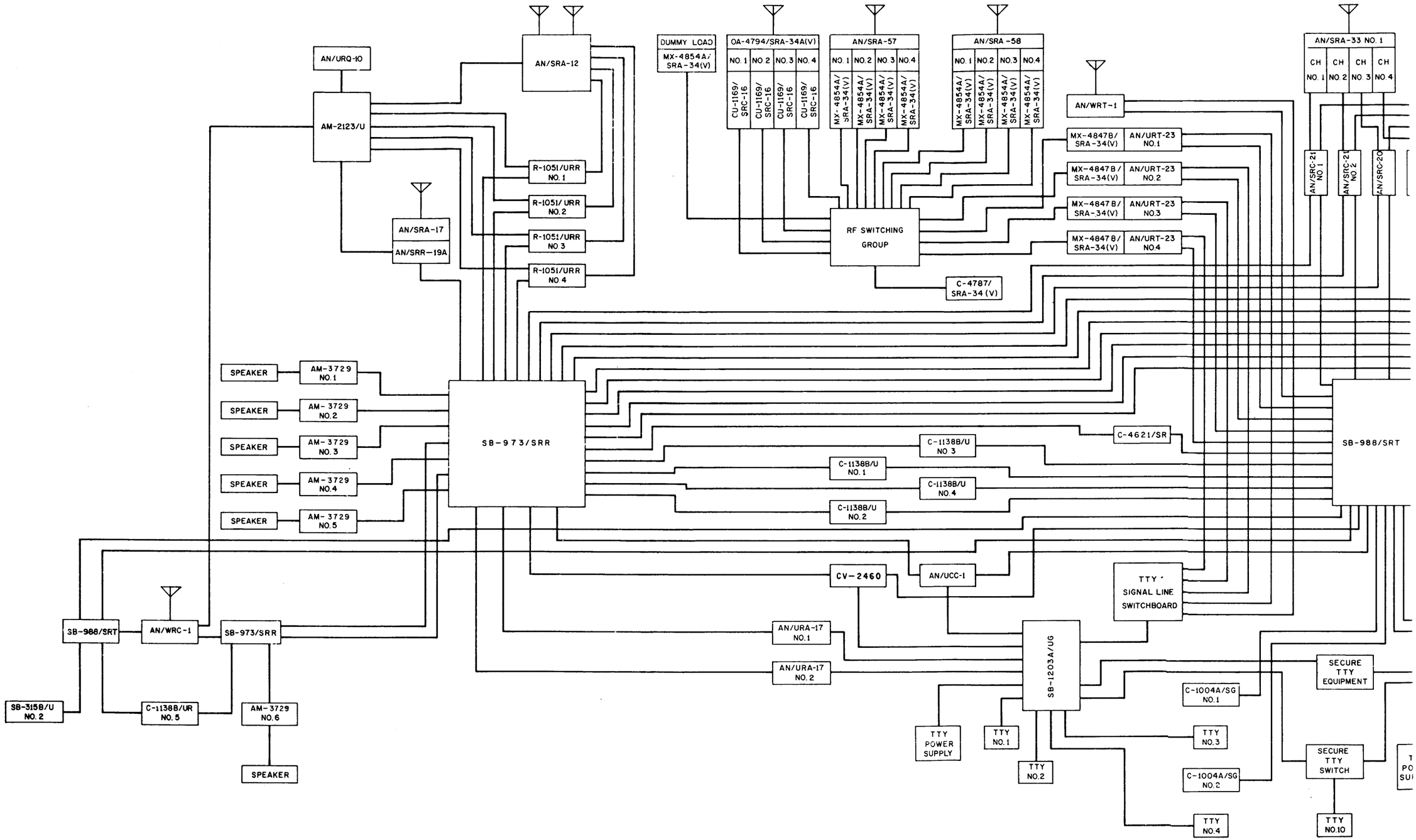
AN/URQ-10
AM-2123/U
AN/SRA-12
R-1051/URR NO. 1
R-1051/URR NO. 2
R-1051/URR NO 3
R-1051/URR NO 4
AN/SRA-17
AN/SRR-19A
DUMMY LOAD
MX-4854A/ SRA-34(V)
OA-4794/SRA-34A(V)
NO. 1 NO. 2 NO. 3 NO. 4
CU-1169/ SRC-16
AN/SRA-57
MX-4854A/ SRA-34(V)
AN/SRA-58
AN/SRA-33 NO. 1
CH NO. 1 CH NO. 2 CH NO. 3 CH NO. 4
AN/WRT-1
MX-4847B/ SRA-34(V)
AN/URT-23 NO. 1
AN/URT-23 NO. 2
AN/URT-23 NO. 3
AN/URT-23 NO. 4
AN/SRC-21 NO. 1
AN/SRC-21 NO. 2
AN/SRC-20
RF SWITCHING GROUP
C-4787/ SRA-34 (V)
SPEAKER
AM-3729 NO. 1
AM-3729 NO. 2
AM-3729 NO. 3
AM-3729 NO. 4
AM-3729 NO. 5
SB-973/SRR
C-4621/SR
C-1138B/U NO. 3
C-1138B/U NO. 1
C-1138B/U NO. 4
C-1138B/U NO. 2
SB-988/SRT
CV-2460
AN/UCC-1
TTY SIGNAL LINE SWITCHBOARD
AN/URA-17 NO. 1
AN/URA-17 NO. 2
SB-1203A/UG
SECURE TTY EQUIPMENT
C-1004A/SG NO. 1
C-1004A/SG NO. 2
SB-315B/U NO. 2
C-1138B/UR NO. 5
AM-3729 NO. 6
TTY POWER SUPPLY
TTY NO. 1
TTY NO. 2
TTY NO. 3
TTY NO. 4
SECURE TTY SWITCH
TTY NO. 10

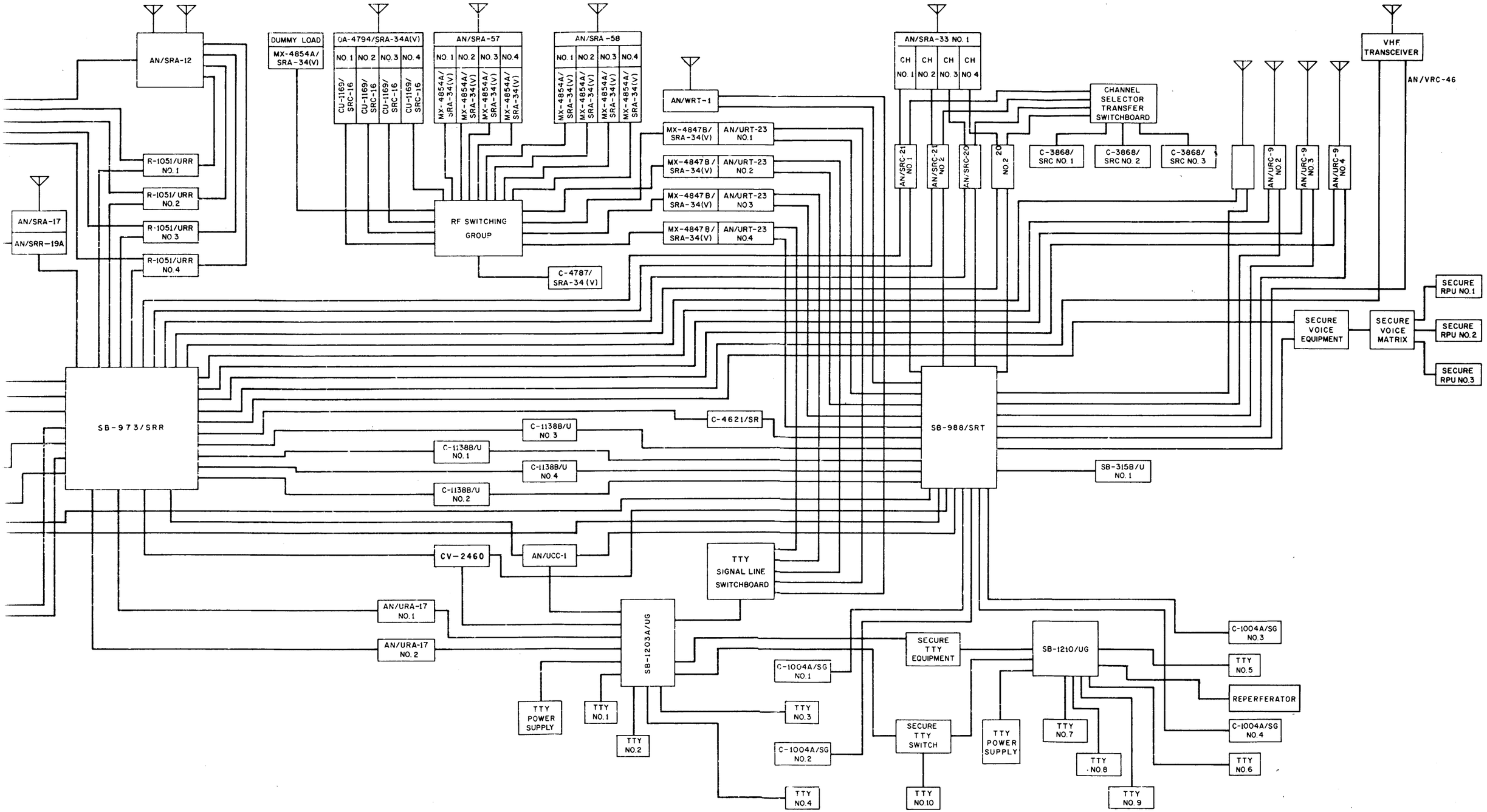

162.205

Figure 5-61.—Communications equipment configuration.